Owners & Installation Manual

REGENCY®
FIREPLACE PRODUCTS

PG36 Gas Log Fireplace

FireGenie™

Models: PG36NG4-R
PG36LPG4-R

PLEASE KEEP THESE INSTRUCTIONS FOR FUTURE REFERENCE

WARNING:
Improper installation, adjustment, alteration, service or maintenance can cause injury or property damage. Refer to this manual. For assistance or additional information consult an authorised installer, service agency or the gas supplier.

FOR YOUR SAFETY:
Do not store or use gasoline or other flammable vapours and liquids in the vicinity of this or any other appliance.

Installation and service must be performed by an authorised installer, service agency or the gas supplier.

FOR YOUR SAFETY:
What to do if you smell gas:

- **Do not try to light any appliance**
- **Do not touch any electrical switch: do not use any phone in your building.**
- **Immediately call your gas supplier from a neighbour's phone. Follow the gas supplier's instructions.**
- **If you cannot reach your gas supplier, call the fire department.**

LISTINGS AND CODE APPROVALS

These gas appliances have been tested in accordance with AS4553-2000, NZS 5262 and have been certified by the Australian Gas Association for installation and operation as described in these Installation and Operating Instructions.

Your unit should be serviced annually by an authorised service person.

918-651

02/20/07

TO THE NEW OWNER:

Congratulations!

You are the owner of a state-of-the-art Gas Log Fireplace by FPI FIREPLACE PRODUCTS INTERNATIONAL LTD. The PG36 has been designed to provide you with all the warmth and charm of a wood fireplace at the flick of a switch. The model PG36 has been approved by the Australian Gas Association for both safety and efficiency. As it also bears our own mark, it promises to provide you with economy, comfort and security for many trouble free years to follow. Please take a moment now to acquaint yourself with these instructions and the many features of your Regency® Fireplace.

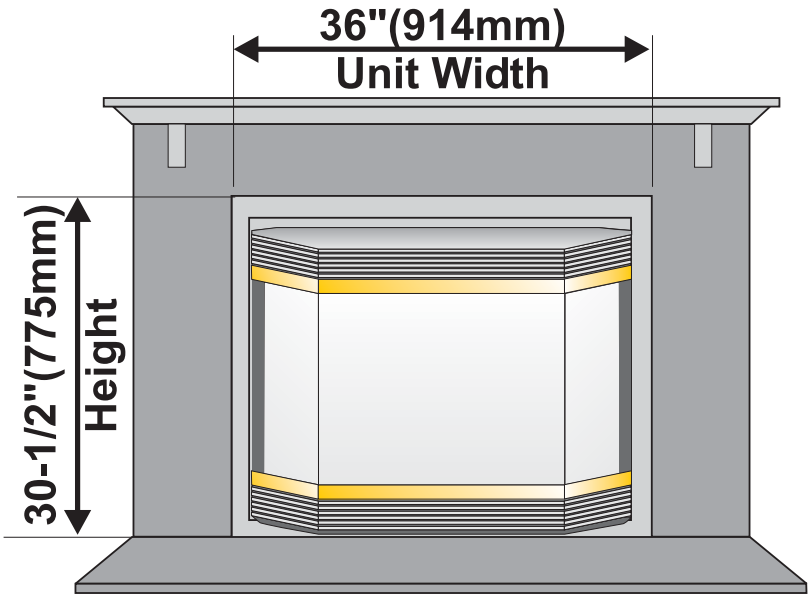

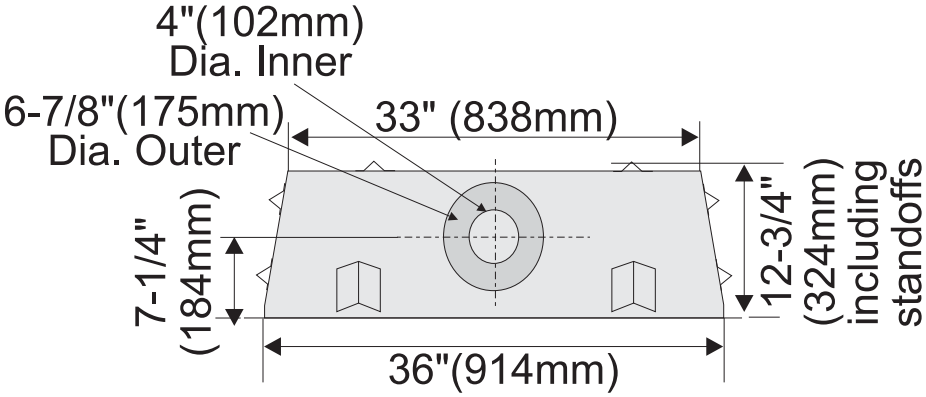

TABLE OF CONTENTS

DATA BADGE

Data Badge 4

INSTALLATION

Important Message.....5
Before You Start 5
General Safety Information 5
Installation Checklist.....5
Clearances 6
Locating Your Fireplace.....6
Manufactured Mobile Home Additional Requirements ..6
Combustible Mantels.....7
Mantel Leg Clearances 8
Framing And Finishing.....8
Unit Assembly Prior To Installation 9
Flueing Introduction.....9
Exterior Flue Termination Locations 10
Flueing.....11
Simpson Dura-vent Flueing.....12
Simpson Dura-vent Flueing Components List.....12
Flueing Arrangements - Horizontal Terminations.....13
Flueing Arrangements - Horizontal Terminations.....14
Flueing Arrangements - Vertical Terminations.....15
Horizontal Terminations.....17
Vertical Terminations 18
Gas Connection.....19
Gas Pipe Pressure Testing.....19
Aeration Adjustment 19
Conversion From NG To LPG Kit #513-968 20
Optional Brick Panels 22
Log Set Installation.....22
Standard Flush Door 24
Premium Flush Front Installation.....25
Wiring 28
Remote Control 30
Operating Instructions 30
Lighting Instructions 30
Resetting The Unit.....30
Shutdown Instructions 30
First Fire 30

OPERATING INSTRUCTIONS

Adjusting Flame Height 31
Summary of Controls 31
Pilot Adjustment.....31
Normal Operating Sounds of Gas Appliances.....31
Copy of The Lighting Plate Instructions 32

MAINTENANCE

Maintenance Instructions 33
Gold or Brass Louvres & Trim 34
Log Replacement 34
Glass Gasket.....34
Door Glass 34
Removing Valve Tray.....35
Fan Replacement 36
Manual Control Switch Replacement 37

PARTS LIST

Electronic Components Parts List 38
Main Assembly 39
Burner Assembly & Log Set 40
Bay Front Assembly 41
Flush Front Accessories 42
Premium Flush Front Assembly 43
Cast Faceplate Assembly.....44

WARRANTY

Warranty 47

DATA BADGE

This is a copy of the label that accompanies each PG36 Zero Clearance Room Sealed Gas Fireplace. We have printed a copy of the contents here for your review.

The label is located on the front inside base of the unit, visible when the bottom louvre is open.

DATA BADGE NOTE: Regency® units are constantly being improved. Check the label on the unit and if there is a difference, the label on the unit is the correct one.

Regency Gas Fireplace

Model	○	○
Gas Type	**NG**	**LPG**
Model	**PG36-NG**	**PG36-LPG**
Gas Consumption	33mj.	31mj.
Manifold Pressure	1.0kPa	2.6kPa
Injector Size	1x#37 2.65mm	1x#52 1.61mm
AGA Approval number to Code AS4553-2000	5815	5815

Distributed by:

Western Australia:
Australian Heating Distributors Pty. Ltd.
31 Clune St.
Bayswater, WA, 6053

Eastern Australia:
Fireplace Products Australia Pty. Ltd.
21-23 South Link Blvd.
Dandenong, VIC 3175

To be installed by an authorised person in accordance with installation instructions provided with the appliance.

Electrical: 240VAC 50Hz 1.0 amp max.

N2134

Serial Number 262

918-285a

DO NOT OPERATE THIS APPLIANCE BEFORE READING THE INSTRUCTIONS BOOKLET.
DO NOT PLACE ARTICLES ON OR AGAINST THIS APPLIANCE
DO NOT STORE CHEMICALS OR FLAMMABLE MATERIALS, OR SPRAY AEROSOLS NEAR THIS APPLIANCE.
DO NOT OPERATE WITH PANELS, COVERS OR GUARDS REMOVED FROM THIS APPLIANCE.
DO NOT ENCLOSE THIS APPLIANCE.

908-602

○ **THE GUARD IS FITTED TO THIS APPLIANCE TO REDUCE THE RISK OR FIRE OR INJURY FROM BURNS AND NO PART OF IT SHOULD BE PERMANENTLY REMOVED.**

FOR PROTECTION OF YOUNG CHILDREN OR THE INFIRM, A SECONDARY GUARD IS REQUIRED.

(Australia Only)

IMPORTANT MESSAGE

SAVE THESE INSTRUCTIONS

The PG36-NG or PG36-LPG Room Sealed Fireplace must be installed in accordance with AS5601-2004 and NZS 5261 5261 and these instructions. Carefully read all the instructions in this manual first. Consult the "authority having jurisdiction" to determine the need for a permit prior to starting the installation. It is the responsibility of the installer to ensure this fireplace is installed in compliance with manufacturer's instructions and all applicable codes.

BEFORE YOU START

NOTE:
NOT INTENDED AS A FIREPLACE INSERT.

INSTALLATION AND REPAIR SHOULD BE DONE BY A AUTHORISED SERVICE PERSON. THE APPLIANCE SHOULD BE INSPECTED BEFORE USE AND AT LEAST ANNUALLY BY AN AUTHORISED SERVICE PERSON. MORE FREQUENT CLEANING MAY BE REQUIRED DUE TO EXCESSIVE LINT FROM CARPETING, BEDDING MATERIAL, ETC. IT IS IMPERATIVE THAT CONTROL COMPARTMENTS, BURNERS AND CIRCULATING AIR PASSAGEWAYS OF THE APPLIANCE BE KEPT CLEAN.

DUE TO HIGH TEMPERATURES, THE APPLIANCE SHOULD BE LOCATED OUT OF TRAFFIC AND AWAY FROM FURNITURE AND DRAPERIES.

WARNING: FAILURE TO INSTALL THIS APPLIANCE CORRECTLY WILL VOID YOUR WARRANTY AND MAY CAUSE A SERIOUS HOUSE FIRE.

CHILDREN AND ADULTS SHOULD BE ALERTED TO THE HAZARDS OF HIGH SURFACE TEMPERATURES, ESPECIALLY THE FIREPLACE GLASS, AND SHOULD STAY AWAY TO AVOID BURNS OR CLOTHING IGNITION.

YOUNG CHILDREN SHOULD BE CAREFULLY SUPERVISED WHEN THEY ARE IN THE SAME ROOM AS THE APPLIANCE.

CLOTHING OR OTHER FLAMMABLE MATERIAL SHOULD NOT BE PLACED ON OR NEAR THE APPLIANCE. DO NOT USE AEROSOLS IN THE VICINITY OF THIS APPLIANCE.

GENERAL SAFETY INFORMATION

1) The appliance shall be installed in accordance with the manufacturer's installation instructions,local gas fitting regulations, municipal building codes, water supply regulations, electrical wiring regulations, with AS5601-2004 (AGA gas installation code) NZS 5261 (New Zealand)

2) **Installation and repair should be done ONLY by an authorised person.**

3) **THIS APPLIANCE IS NOT INTENDED AS A FIREPLACE INSERT. DO NOT CONNECT TO MASONARY FLUE.**

4) **This appliance must be connected to the specified flue and termination cap to the outside of the building envelope. Never flue to another room or inside a building. Make sure that the flue is fitted as per Flueing instructions.**

5) Inspect the flueing system annually for blockage and any signs of deterioration.

6) Flueing terminals shall not be recessed into a wall or siding.

7) Any safety glass removed for servicing must be replaced prior to operating the appliance.

8) To prevent injury, do not allow anyone who is unfamiliar with the operation to use the fireplace.

9) Wear gloves and safety glasses for protection while doing required maintenance.

10) Be aware of electrical wiring locations in walls and ceilings when cutting holes for termination.

11) Under no circumstances should this appliance be modified. Parts that have to be removed for servicing should be replaced prior to operating this appliance.

12) Installation and any repairs to this appliance should be done by an authorised service person. An authorised service person should be called to inspect this appliance annually. Make it a practice to have all of your gas appliances checked annually.

13) Do not slam shut or strike the glass door.

14) Under no circumstances should any solid fuels (wood, paper, cardboard, coal, etc.) be used in this appliance.

15) The appliance area must be kept clear and free of combustible materials, (gases and other flammable vapours and liquids).

INSTALLATION CHECKLIST

1) Locate appliance. Refer to the following sections:

a) Locating Your Gas Fireplace
b) Combustible Mantels
c) Mantel Leg Clearances
d) Framing and Finishing
e) Flueing

2) Assemble Top Standoffs and Top Facing Support and Side Nailing Strips. Refer to the "Unit Assembly Prior to Installation" section. (NOTE: must be done before installing unit into fireplace.)

3) Install flue, refer to the "Horizontal Termination" & "Vertical Termination" sections.

4) Make gas and electrical connections. Test the pilot. Must be as per diagram. Refer to the " Pilot Adjustment" section.

5) Install standard and optional features. Refer to the following sections where applicable:

a. Brick Panels
b. Log Set Installation
c. Flush Door
d. Premium Flush Front
e. Bay Door
f. Hampton Cast Faceplate
g. Hampton Cast Grills
h. Remote Controls

6) Final check.

Before leaving this unit with the customer, the installer must ensure that the appliance is firing correctly and **operation fully explained to customer**.

This includes:

1) Clocking the appliance to ensure the correct firing rate (rate noted on label 30,000 Btu/h) after burning appliance for 15 minutes.

2) If required, adjusting the primary air to ensure that the flame does not carbon. First allow the unit to burn for15-20 min. to stabilize.

CAUTION: Any alteration to the product that causes sooting or carboning that results in damage is not the responsibility of the manufacturer.

LOCATING YOUR FIREPLACE

1) When selecting a location for your fireplace, ensure that the clearances outlined on this page are met.

2) Provide adequate clearances for servicing.

3) The appliance must be installed on a flat, solid, continuous surface (e.g. wood, metal, concrete). This may be the floor, or raised up on a platform to enhance its visual impact. If the appliance is going to be installed on carpeting, combustible linoleum tile or other combustible material other than wood flooring, the appliance must be installed on a metal or wood panel extending the full width and depth of the appliance.

4) The PG36 Co Axial Flue Gas Fireplace can be installed in a recessed position or framed out into the room as in A, B, C, D. See Diagram 1.

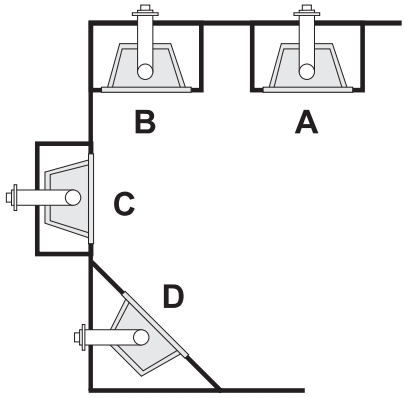

Diagram 1

A) Flat on Wall
B) Flat on Wall Corner
C) Recessed into Wall/Alcove
D) Corner

5) This appliance is Listed for bedroom installations when used with a Listed Millivolt Thermostat. Some areas may have further requirements, check local codes before installation.

6) The PG36 Co Axial Flue Gas Fireplace is approved for alcove installations, which meet the clearances listed on this page.

7) We recommend that you plan your installation on paper using exact measurements for clearances and floor protection before actually installing this appliance. Have an authorized inspector, dealer, or installer review your plans before installation.

Note: For flue terminations see the "Exterior Flue Termination Locations" section.

MANUFACTURED MOBILE HOME ADDITIONAL REQUIREMENTS

1) Ensure that structural members are not cut or weakened during installation.

2) Ensure proper grounding using the #8 ground lug provided. Refer to the "Wiring" section.

CLEARANCES

The clearances listed below are Minimum distances unless otherwise stated:

A major cause of chimney related fires is failure to maintain required clearances (air space) to combustible materials. It is of the greatest importance that this fireplace and flue system be installed only in accordance with these instructions.

Clearance to Combustibles from:

Back	0"	(0mm)
Side	0"	(0mm)
Floor	0"	(0mm)

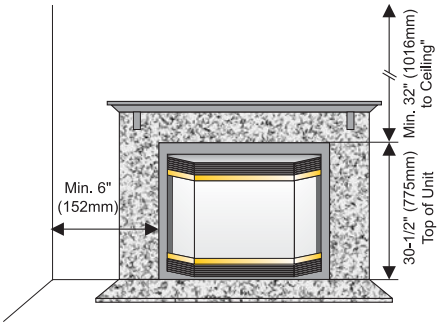

Clearances for Bay or Flush Front

NOTE: The minimum floor clearance must be maintained from the top surface of the carpeting, tile, etc.

Minimum Clearance from Top of Unit to:

Mantel* Minimum	7"	(177mm)
Ceiling from top of unit.	32"	(1016mm)

Side Wall Clearance

Bay or Flush Front	6"	(152mm)

Horizontal Flue Clearances

Top	2"	(51mm)
Side	1-1/2"	(38mm)
Bottom	1-1/2"	(38mm)

Vertical Flue Clearances 1-1/4" (32mm)

Alcove Clearances:**

Max. Depth	36"	(914mm)
Min. Width	48"	1219mm)
Min. Height	72"	1829mm)

** see mantle clearance instructions (Refer to the "Combustible Mantels," & "Mantel Leg Clearances" sections.)*

WARNING
Fire hazard is an extreme risk if these clearances are not adhered to.

COMBUSTIBLE MANTELS

Due to the extreme heat this fireplace emits, the mantel clearances are critical. Combustible mantel clearances from the top of unit are shown in the diagrams below.

Note: A non-combustible mantel may be installed at a lower height if the framing is made of metal studs covered with a non-combustible board.

These drawings are to scale at 1:6 (one inch = 6 inches)
Mantel can be installed anywhere in shaded area or higher using the above scale.

Note: Ensure the paint that is used on the mantel and the facing is "heat resistant" or the paint may discolour.

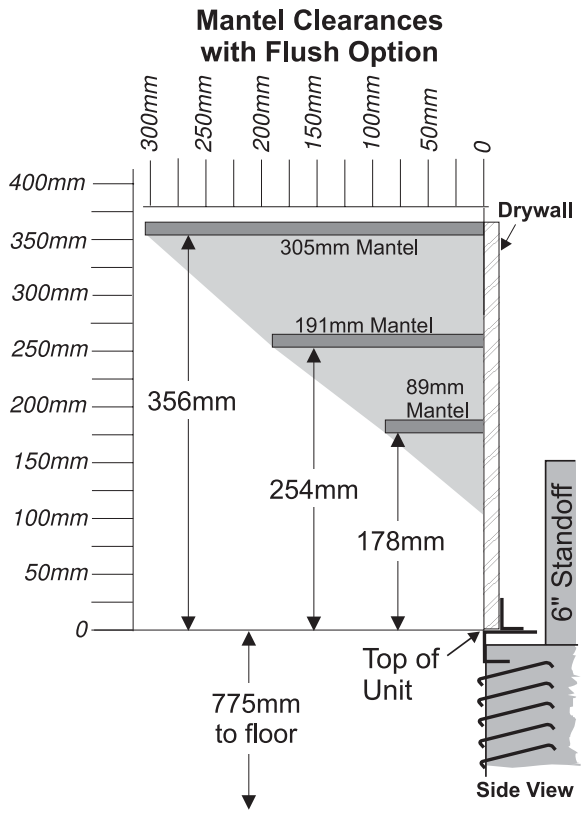

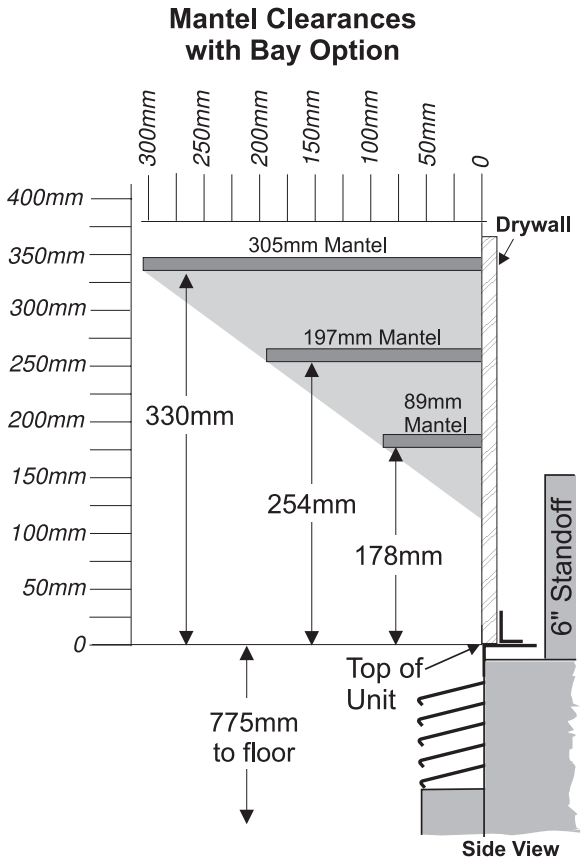

MANTEL LEG CLEARANCES

Combustible mantel leg clearances as per diagram below:

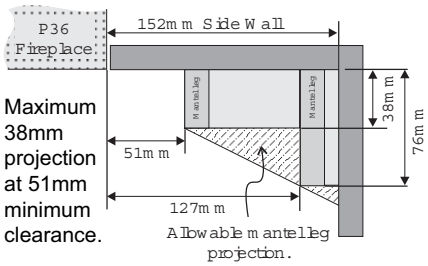

Maximum 38mm projection at 51mm minimum clearance.

FRAMING AND FINISHING

1) Determine the total thickness of facing material (e.g. drywall plus ceramic tiles) to allow the finished surface to be flush with the front of the unit. Total facing thickness can vary from 1/2" (13mm) to 1-1/4" (32mm) thick.

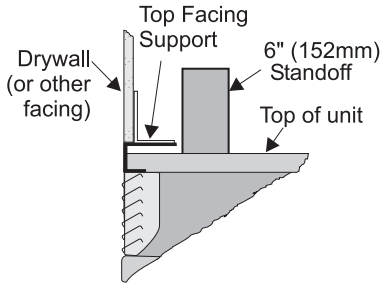

Install Side Nailing Strips, Top Facing Support, and Top Standoffs before unit is slipped into position. See "Unit Assembly Prior to Installation" section for assembly details.

NOTE:
When using the Premium Flush Front option, a finishing trim (962mm cover) needs to be installed to cover the spacers.

Maintain a physical gap between lining and spacers 2-5mm. (5mm clearance to framing each side).

2) Frame in the enclosure for the unit with framing material.

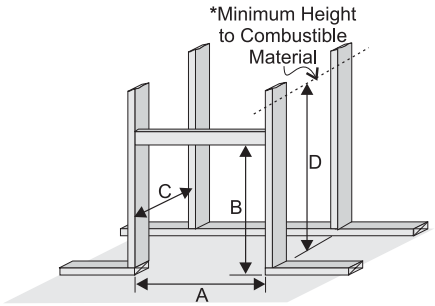

Standard Framing Dimensions			
A	B	C	D
36-1/4"	36-1/4"	12-3/4"	46"*
921mm	921mm	324mm	1126mm*

Framing Dimensions with Premium Flush Front Option			
A	B	C	D
37-1/4"	37-1/4"	17-3/8"	46-1/2"*
944mm	946mm	432mm	1182mm*

* 'D' is Minimum height to combustible materials including the Minimum 2" (51mm) Top clearance to the Horizontal Flue, see flue clearances in section "Clearances."

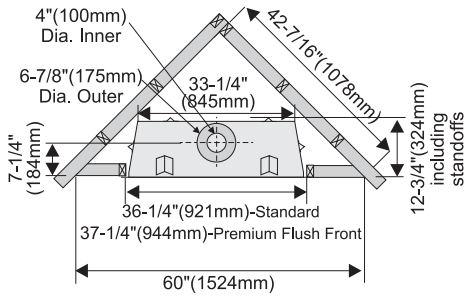

3) For exterior walls, insulate the enclosure to the same degree as the rest of the house, apply vapour barrier and drywall, as per local installation codes. **(Do not insulate the fireplace itself.)**

4) The top of the unit must not be closer than 32" (813mm) to the ceiling.

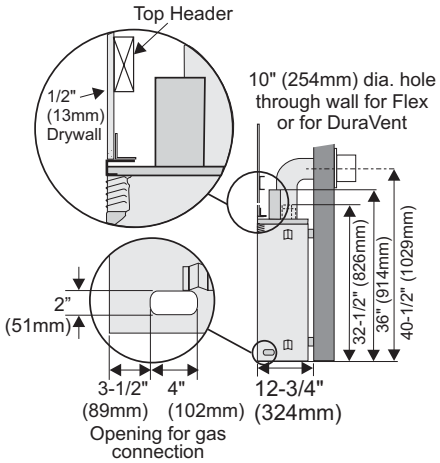

Note: 40-1/2" (1029mm) is the minimum height for both flex termination or Simpson Dura-Vent flueing.

Note: The unit does not have to be completely enclosed in a chase. The clearance on top of the unit is 0" to the standoffs so combustible building materials can be laid directly on top of the standoffs. You must maintain 1-1/2" (38mm) clearance from the flue to combustible materials for flex (1-1/4" (32mm) for Simpson Dura-Vent).

5) Use steel studs for framing where the 1-1/2" (38mm) clearance from the flue to combustible material cannot be maintained, e.g. front top header.

Premium Flush Front Framing

Do not use combustible material as lining (eg. timber) around the fireplace as shown in the shaded area in the diagram below.

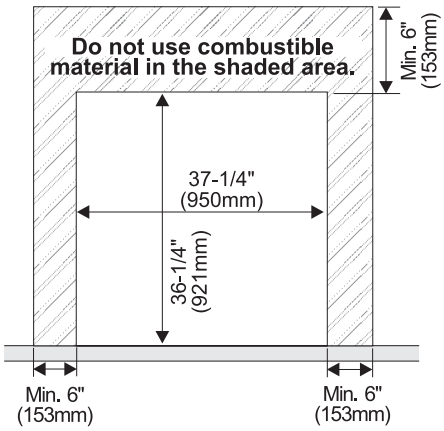

UNIT ASSEMBLY PRIOR TO INSTALLATION

The Top Facing Support, the Side Nailing Strips and the 2 Top Standoffs must be correctly positioned and attached to the top before unit is slipped into position.

Top Standoff Assembly

The top standoffs are shipped in a flat position and must be folded into shape and attached.

1) Remove the standoffs from the fireplace top.

2) Take each standoff and bend into the correct shape. Bend up at the bend lines until the screw holes in the standoff and the pre-punched screw holes on the fireplace top line up.

3) Attach the standoff securely to the top with 2 screws per standoff (on opposite corners).

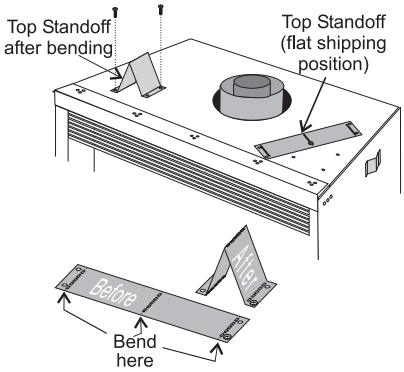

Top Facing Support and Side Nailing Strips

Determine the total thickness of facing material (e.g. drywall plus ceramic tiles) to allow the finished surface to be flush with the front of the unit. Total facing thickness can vary from 1/2" (13mm) to 1-1/4" (32mm) thick.

The Top Facing Support & Side Nailing Strips can be mounted in 3 different positions depending on the thickness of the facing material.

Screw Position	Facing Material Depth	
A	1/2"	/ 13mm
B	7/8"	/ 22mm
C*	1-1/4"	/ 32mm

* For "C" screw position the top facing support is reversed.

1) Mount Top Facing Support using the 3 supplied screws into the three pre-punched screw holes on the top front of the unit. Use hole positions A, B, or C depending on your facing depth.

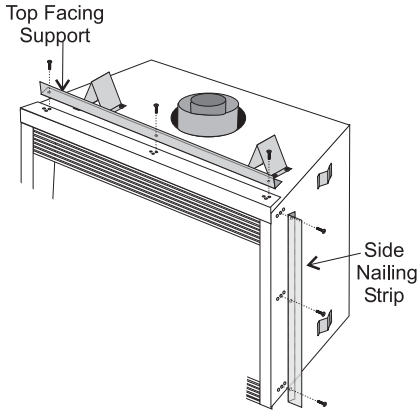

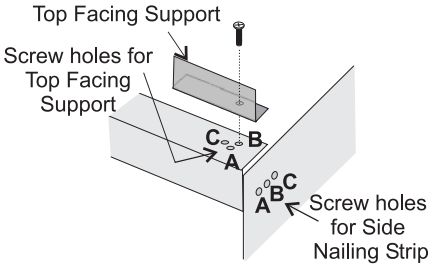

"C" Screw Position:
For a facing material depth of 1-1/4" (32mm), the top facing support must be reversed.

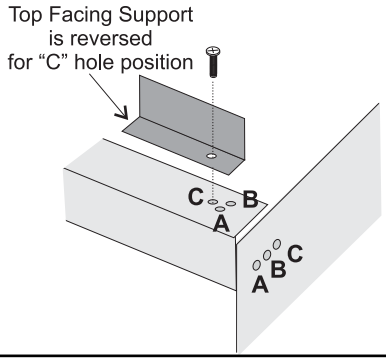

2) Use the same screw hole position for the Side Nailing Strips as was used for the Top Facing Support. Attach each side nailing strip using 3 screws.

Premium Flush Front Spacer Installation

Before the unit is slid into position, install the provided spacers to the side of the fireplace as follows;

1) Align the screw locations on spacer with screw locations on the side of the firebox and secure in place using 3 screws.

2) Repeat for other side.

NOTE: The side nailing strips are to be installed to the spacer after the spacer is attached to the unit.

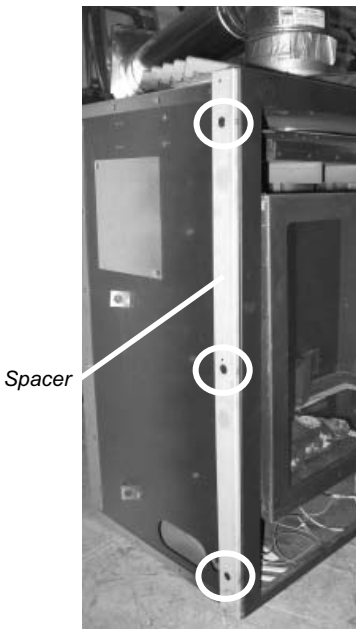

Left Side Shown

FLUEING INTRODUCTION

The PG36 uses the "balanced flue" technology Co Axial system. The inner liner flues products of combustion to the outside while the outer liner draws outside combustion air into the combustion chamber thereby eliminating the need to use heated room air for combustion and losing warm room air up the chimney.

Note: These flue pipes must not be connected to any other appliance.

The gas appliance and flue system must be flued directly to the outside of the building, and never be attached to a chimney serving a separate solid fuel or gas burning appliance. Each Co Axial Flue gas appliance must use it's own separate flue system. Common flue systems are prohibited.

EXTERIOR FLUE TERMINATION LOCATIONS

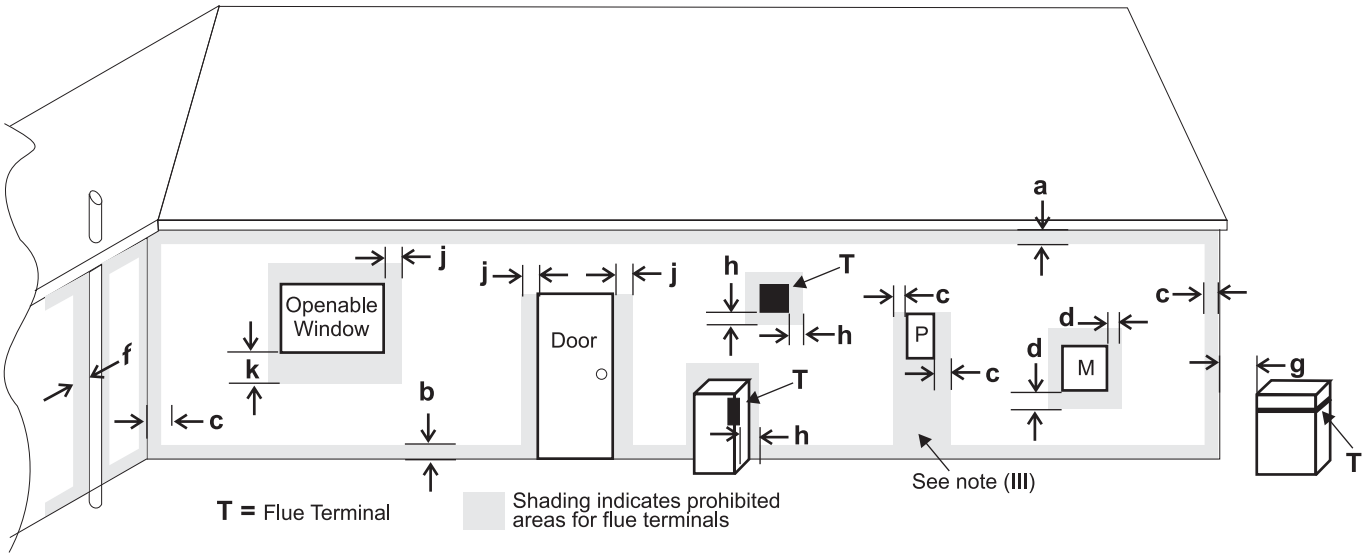

Minimum clearances required for balanced flue terminals or the flue terminals of outdoor appliances according to AS5601-2004 (AGA gas installation code) or NZS 5261 (New Zealand)

		Minimum Clearance (mm)
a	Below eaves, balconies or other projections:	
	- Appliances up to 50 MJ/h input	300
	- Appliances over 50 MJ/h input	500
b	From the ground or above a balcony	300
c	From a return wall or external corner	500
d	From a gas meter (M)	1000
e	From an electricity meter or fuse box (P)	500
f	From a drain or soil pipe	150
g	Horizontal from any building structure (unless appliance is approved for closer installation) or obstruction facing a terminal	500
h	From any other flue terminal, cowl or combustion air intake	500
j	Horizontally from an openable window, door, or non-mechanical air inlet, or any other opening into a building, with the exception of sub-floor ventilation (see also Note (I)):	
	- Appliances up to 150 MJ/h input	500
	- Appliances over 150 MJ/h input	1500
k	Vertically below an openable window, door, or non-mechanical air inlet, or any other opening into a building, with the exception of sub-floor ventilation (see also Note (I)): see table below	

Clearance 'k' in mm			
Space Heaters	All Other Appliances		
Up to 50 MJ/h input	Up to 50 MJ/h input	Over 50 MJ/h input to 150 MJ/h input	Over 150 MJ/h input
150	500	1000	1500

NOTES:

(I) For mechanical air inlets, including spa blowers, the clearance 'j' and 'k' shall be 1500 mm in all cases.

(II) All distances shall be measured vertically or horizontally along the wall to a point in line with the nearest par to of the terminal.

(III) Prohibited area below electricity meter or fuse box extends to ground level.

(IV) A flue terminal of this type shall not be located under a roofed area unless the roofed area is fully open on at least two sides and a free flow of air at the appliance is achieved.

FLUEING

Regency® Direct Vent System (Flex)
Horizontal Terminations Only

These flueing systems, in combination with the PG36 Room Sealed Gas Fireplace, have been tested and listed as a Direct Vent type flue system by the Australian Gas Association. The location of the termination cap must conform to the requirements in the Flue Terminal Locations diagram in the "Exterior Flue Termination Locations" section.

Regency® Direct Vent (Flex) System Termination Kit (Part # 946-515) includes all the parts needed to install the PG36 with a maximum run of 1200mm.

1) 175mm dia. flexible liner (1200mm length)
2) 100mm dia. flexible liner (1200mm length)
3) spring spacers (4)
4) thimble (2)
5) ***AstroCap*** termination cap (1)
6) screws (12)
7) tube of Mill Pac (1)
8) plated screws (8)
9) screws #8 x 1-1/2" Drill Point, Stainless Steel (4)

If longer runs are needed, the Regency® Direct Vent system (Flex) # 946-516 includes all the parts needed to install the PG36 with a maximum 3.0m run.

1) 175mm dia. flexible liner (3.0m length)
2) 100mm dia. flexible liner (3.0m length)
3) spring spacers (7)
4) thimble (2)
5) ***AstroCap*** termination cap (1)
6) screws (12)
7) tube of Mill Pac (1)
8) plated screws (8)
9) screws #8 x 1-1/2" Drill Point, Stainless Steel (4)

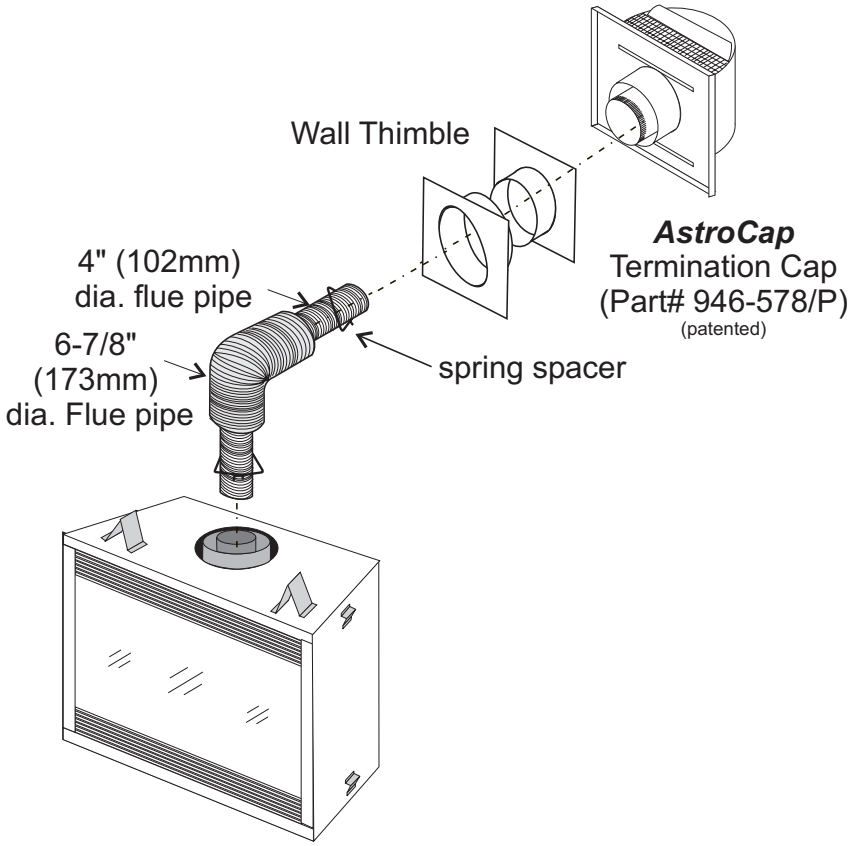

Notes:

1) Liner sections should be continuous without any joints or seams.

2) Only Flex pipe purchased from Regency® may be used for Flex installations.

3) If you are installing the PG36 into a Regency® Mantel Kit, use the minimum horizontal vent height (centre-line of 1029mm). Remember to include the mantel base in your calculations and to maintain the 32mm clearance (38mm with Flex) to the underside of the mantel top.

SIMPSON DURA-VENT FLUEING

Horizontal or Vertical Terminations

The Simpson Dura-Vent Co Axial Flue System offers a complete line of component parts for installation of both horizontal and vertical installations. Many items are offered in decorative black, as well as galvanized finish. We recommend using the galvanized finish for installation with the PG36.

The minimum components required for a basic horizontal termination are:

1 Horizontal Termination Cap
1 90° Elbow
1 Flue Adaptor
1 Wall Thimble
1 Length of pipe to suit wall thickness (see chart)

Wall thickness is measured from the back standoffs to the inside mounting surface of termination cap. For siding other than vinyl furring strips may be used, instead of the vinyl siding standoff, to create a level surface to mount the flue terminal. The Terminal must not be recessed into siding. Measure the wall thickness including furring strips.

If a Vinyl Siding Standoff is required (it must be used with vinyl siding), measure to outside surface of wall without siding and add 2 inches.

Flat Wall Installation	
Wall Thickness (inches)	**Vent Length Required (inches)**
4" - 5-1/2"	6"
7" - 8-1/2"	9"
10" - 1-1/2"	12"
9" - 14-1/2"	11" - 14-5/8" Adj. Pipe
15" - 23-1/2"	17" - 24" Adj.
Corner Installation	
Wall Thickness (inches)	**Vent Length Required (inches)**
3-1/4" - 6-3/4"	11" - 14-5/8" Adj. Pipe
7-3/4" - 16-1/4"	17" - 24" Adj. Pipe
7-1/4" - 8-3/4"	6" + 12" 9" + 9"
4-1/4" - 5-3/4"	6" + 9"

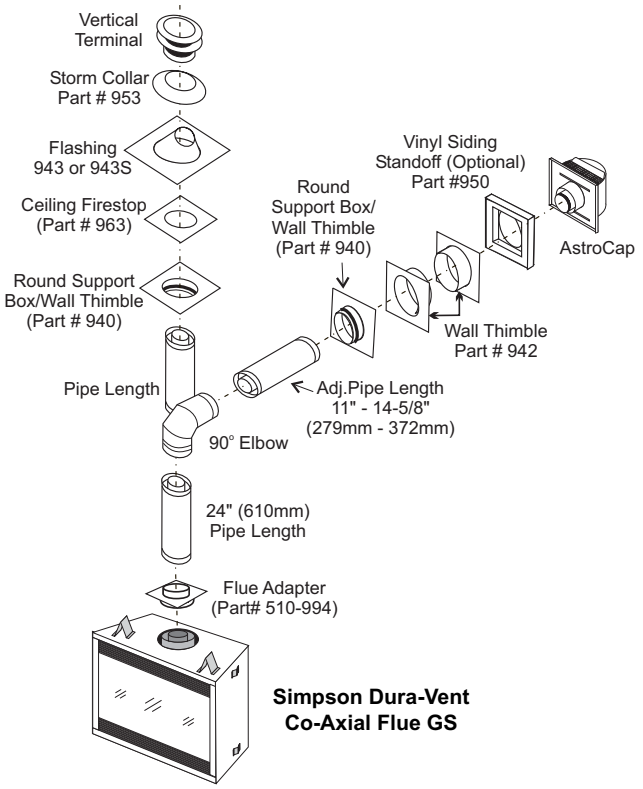

Simpson Dura-Vent Co-Axial Flue GS

SIMPSON DURA-VENT FLUEING COMPONENTS LIST

All Simpson Dura-Vent components are available directly from Masport.

Part #	Description
971	Horiz. Termination Kit includes: 90° black elbow, wall thimble cover, horiz. square termination cap, 24" black pipe, and 11" -14" 5/8" adjustable black pipe
970	Basic Horiz. Termination. Kit includes: 90° black elbow, wall thimble cover, horiz. square termination cap
978	Vert. Termination Kit includes 0/12 - 6/12 pitch adjustable flashing, storm collar, low profile term. cap
908B	6" (152mm) Pipe Length - Black
907B	9" (229mm) Pipe Length - Black
906	12" (305mm) Pipe Length - Galv.
906B	12" (305mm) Pipe Length - Black
904	24" (610mm) Pipe Length - Galv.
904B	24" (610mm) Pipe Length - Black
903	36" (914mm) Pipe Length - Galv.
903B	36" (914mm) Pipe Length - Black
902	48" (1219mm) Pipe Length - Galv.
902B	48" (1219mm) Pipe Length - Black

Part #	Description
911B	11"-14 5/8" (279mm - 372mm) Adjustable Pipe Length - Black
917B	17"- 24" (432mm - 610mm) Adjustable Length - Black
945	45° Elbow - Galv.
945B	45° Elbow - Black
945G	45° Elbow - Swivel - Galv.
945BG	45° Elbow - Swivel - Black
990	90° Elbow - Galv.
990B	90° Elbow - Black
990G	90° Elbow - Swivel - Galv.
990BG	90° Elbow - Swivel - Black
991	High Wind Termination Cap (Vertical)
980	Vertical Termination Cap
984	Horizontal Square Termination Cap
985	Horiz. Square High Wind Termination Cap
982	Snorkel - 14"(356mm) Rise Term.Cap
981	Snorkel - 36" (914mm) Rise Termination Cap

Part #	Description
940	Wall Thimble - Support/Box
941	Cathedral/Ceiling - Support/Box
3951	Brass Trim for Wall Thimble/ Ceiling Sup.
963	Firestop Spacer
943	Flashing 0/12-6/12
943S	Flashing 7/12-12/12
953	Storm Collar
950	Vinyl Siding Standoff
988	Wall Strap
942	Wall Thimble

Parts not supplied by Dura-Vent

946-506/P	Flue Guard (Optional)
510-994	Dura-Vent Flue Adaptor
640-530/P	Riser Flue Terminal
946-205	Vinyl Siding Shield for Riser Flue Terminal

FLUEING ARRANGEMENTS - HORIZONTAL TERMINATIONS

SIMPSON DURA-VENT DIRECT FLUE GS SYSTEM and REGENCY® DIRECT FLUE SYSTEM (FLEX)

(LPG & NG)

The diagram shows all allowable combinations of vertical runs with horizontal terminations, using one 90° elbow (two 45° elbows equal one 90° elbow).

Note: Must use optional flue adapter (Part # 510-994) when using Simpson Dura-Vent pipe.

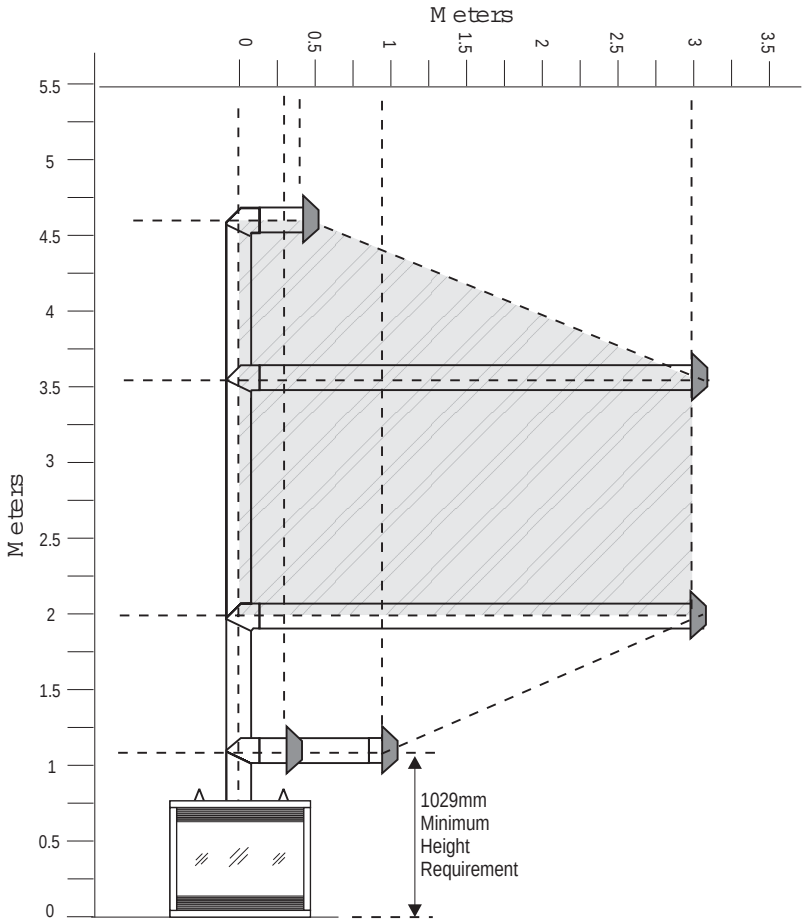

Simpson Dura-Vent
4" (102mm) inner diameter
6-5/8" (168mm) outer diameter

Regency® Flex Vent
4" (102mm) inner diameter
6-7/8" (175mm) outer diameter

A flue guard should be used whenever the termination is lower than the specified minimum or as per local codes.

Note: Regency® Co Axial Flue System (Flex) is only approved for horizontal terminations.

- **Maintain clearances to combustibles as listed in the "Clearances," "Locating Your Gas Fireplace," "Combustible Mantels," "Mantel Leg Clearances" & "Framing and Finishing" sections.**
- **Horizontal flue must be supported every 3 feet (0.9 meters).**
- **Firestops are required at each floor level and whenever passing through a wall.**

FLUEING ARRANGEMENTS - HORIZONTAL TERMINATIONS

SIMPSON DURA-VENT DIRECT FLUE GS SYSTEM and REGENCY® CO AXIAL FLUE SYSTEM (FLEX)

(LPG & NG)

The diagram below shows examples of horizontal termination arrangements using two 90° elbows (two 45° elbows equal one 90° elbow).

Note:
1) **A maximum of two 90° elbows are permitted.**
2) **A minimum of 6 ft. (1.8m) vertical from base of unit is required if two 90° elbows are used.**
3) **Minimum distance between elbows is 2 ft. (0.6m).**
4) **Determine the permitted range of horizontal termination arrangements by using chart in the "Simpson Dura-Vent Flueing" section and deducting 3 ft. (0.9m) from the maximum horizontal distance for the second 90° elbow.**

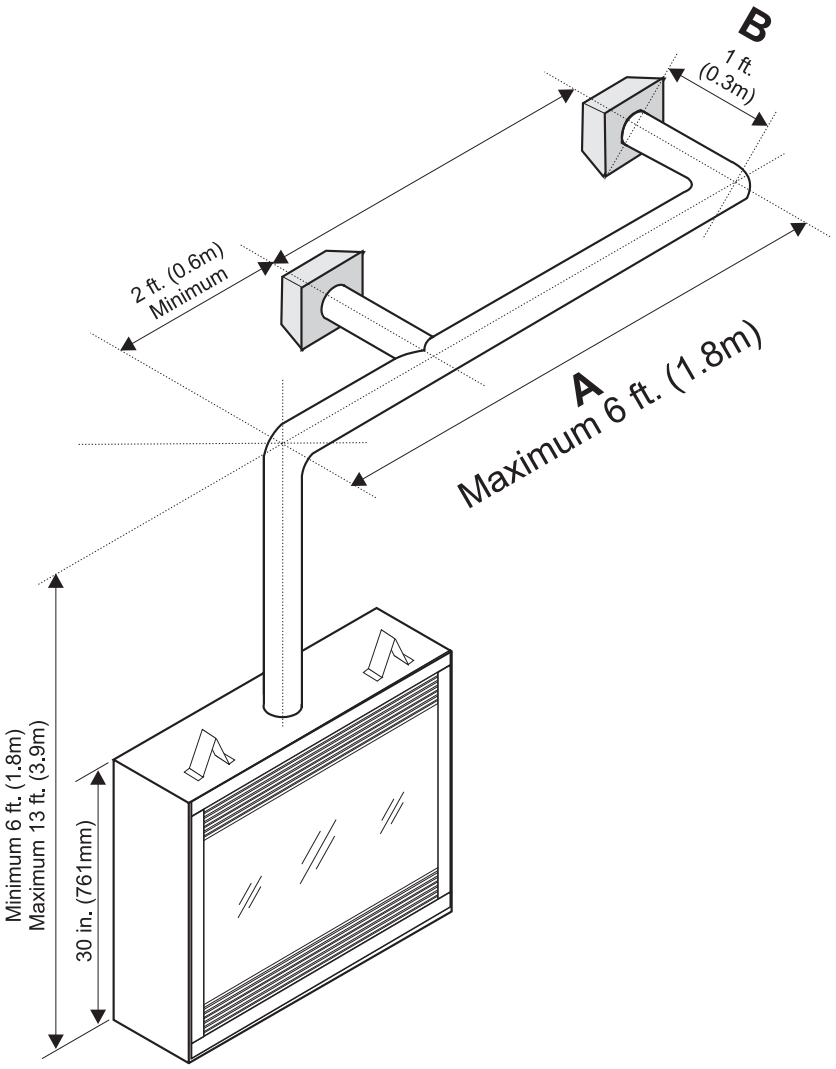

If length "B" is increased, length "A" must be decreased by a corresponding amount.

Simpson Dura-Vent
4" (102mm) inner diameter
6-5/8" (168mm) outer diameter

A flue guard should be used whenever the termination is lower than the specified minimum or as per local codes.

- **Maintain clearances to combustibles as listed in the "Clearances," "Locating Your Gas Fireplace," "Combustible Mantels," "Mantel Leg Clearances" & "Framing and Finishing" sections.**
- **Horizontal flue must be supported every 3 feet (0.9 meters).**
- **Firestops are required at each floor level and whenever passing through a wall.**

FLUEING ARRANGEMENTS - VERTICAL TERMINATIONS

SIMPSON DURA-VENT CO AXIAL FLUE GS SYSTEM (LPG & NG)

The PG36 is approved for a 23 ft. (7.0m) vertical, with a maximum 12 ft. (3.7m) horizontal offset using two 90° elbows (two 45° elbows equal one 90° elbow) with **Simpson Dura-Vent Co Axial Flue GS** flue systems for LPG and NG, as per diagram 1.

The PG36 is approved for a 37 ft. (11.3m) straight vertical, including a 20" (0.5m) horizontal offset using two 90° elbow (two 45° elbows equal one 90° elbow) with **Simpson Dura-Vent Co Axial Flue GS** flue systems for LPG and NG, as per the diagram 2.

- **Flue must be supported at offsets**
- **Maintain clearances to combustibles as listed in the "Clearances," "Locating Your Gas Fireplace," "Combustible Mantels," "Mantel Leg Clearances" & "Framing and Finishing" sections.**

Note: Must use optional flue adapter when using Simpson Dura-Vent pipe (Part # 510-994).

Note: Regency® Co Axial Flue System (Flex) is only approved for horizontal terminations.

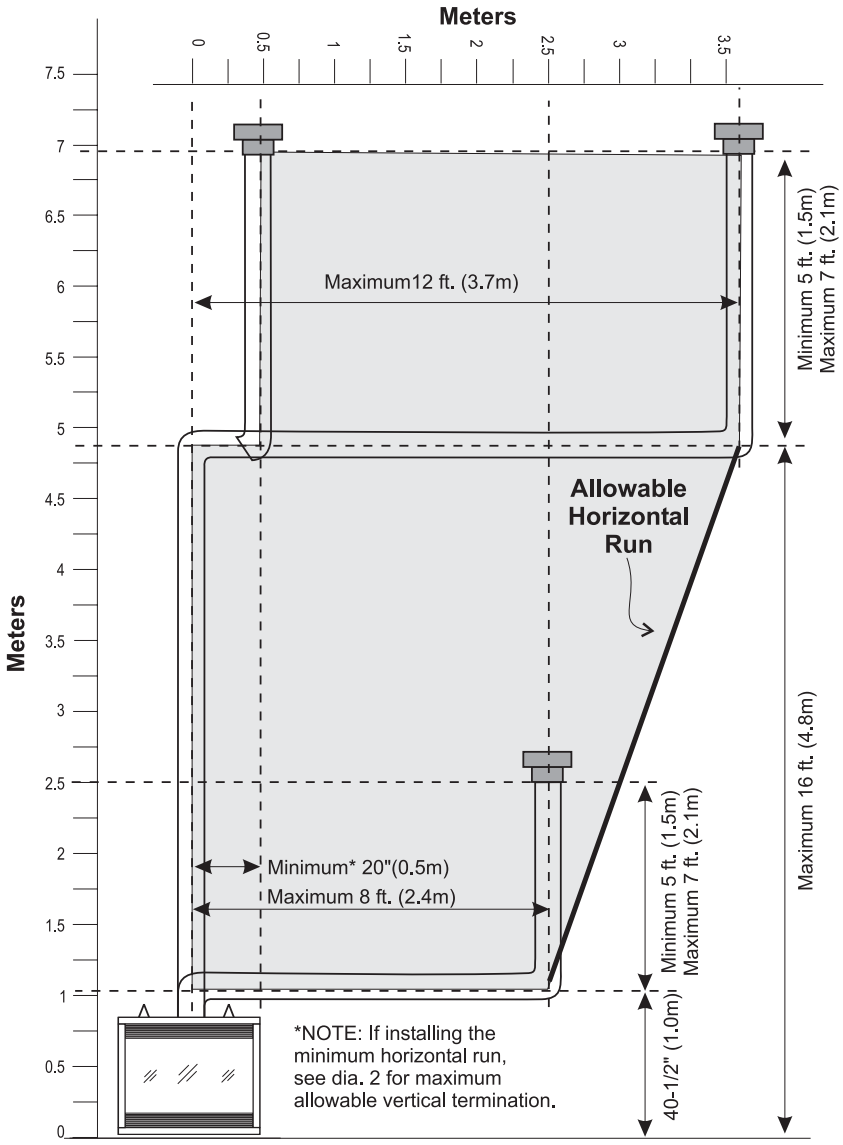

Diagram 1

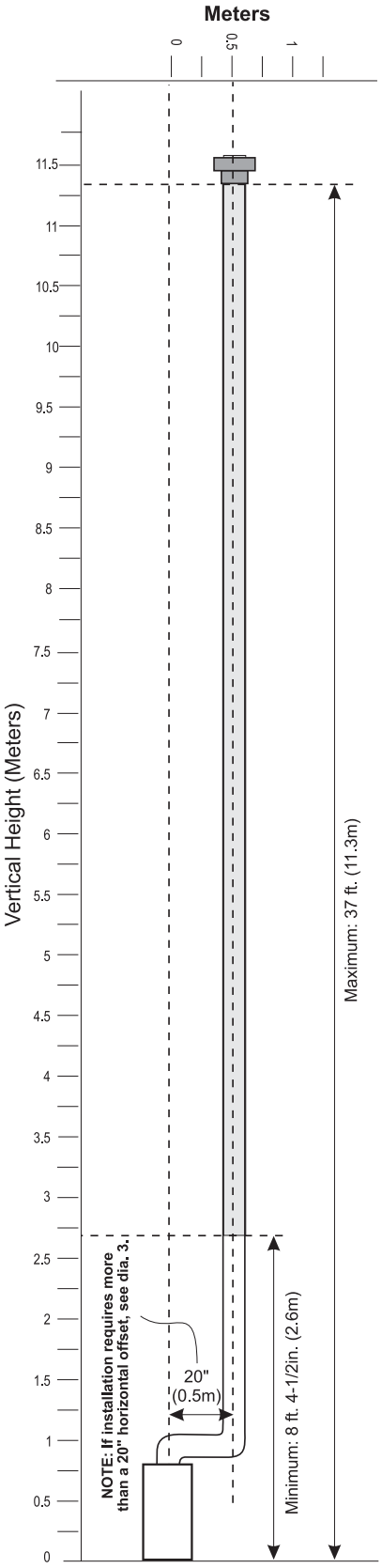

Diagram 2

The PG36 is approved for a 37 ft. (11.3m) straight vertical, with **Simpson Dura-Vent Co Axial Flue GS** flue systems for LPG and NG, as per the diagram 3.

The shaded area in the diagram 3 shows all allowable combinations of straight vertical and offset to vertical terminations with **Simpson Dura-Vent Co Axial Flue GS** flue systems for LPG and NG. Maximum two 45° elbows allowed.

- **Flue must be supported at offsets**
- **Firestops are required at each floor level and whenever passing through a wall.**
- **Maintain clearances to combustibles as listed in the "Clearances," "Locating Your Gas Fireplace," "Combustible Mantels," "Mantel Leg Clearances" & "Framing and Finishing" sections.**

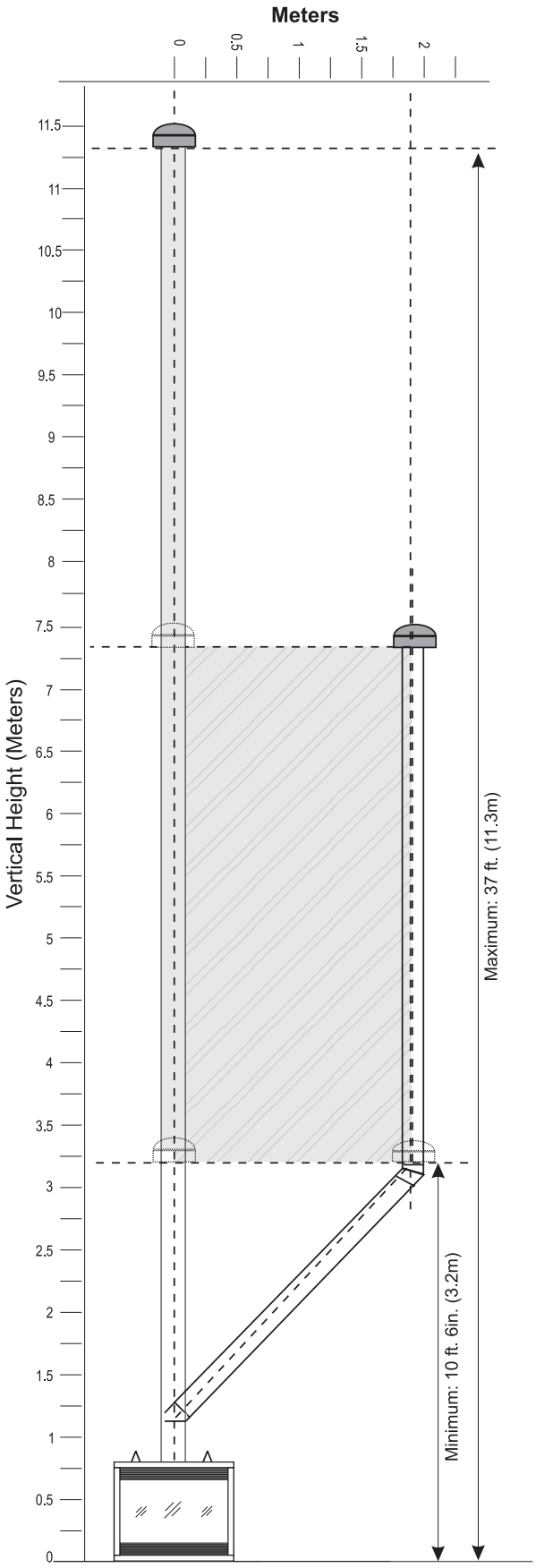

Diagram 3

HORIZONTAL TERMINATIONS

Install the flue system according to the manufacturer's instructions included with the components.

1) Set the unit in its desired location. Check to determine if wall studs or roof rafters are in the way when the flueing system is attached. If this is the case, you may want to adjust the location of the unit. Rough in the gas preferably on the right side of the unit and the electrical (junction block is on the left side) on the left.

2) Co Axial Flue pipe and fittings are designed with special twist-lock connections to connect the flueing system to the appliance flue outlet. A twist-lock appliance adaptor is an available option that must be used in conjunction with the Simpson Dura-Vent Co Axial Flue GS system.

3) Put a bead of silicone inside the outer section of the adapter and a bead of Stove Mate on the inner collar. Slip the adapter over the existing inner and outer flue collar and fasten to the outer collar only with the 3 supplied screws (drilling pilot holes will make this easier). Level the fireplace and fasten it to the framing using nails or screws through the nailing strips.

4) Assemble the desired combination of pipe and elbows to the appliance adaptor and twist-lock for a solid connection.

Note:

a) Twist-lock procedure: Four indentations, located on the female ends of pipes and fittings, are designed to slide straight onto the male ends of adjacent pipes and fittings, by orienting the four pipe indentations so they match and slide in to the four entry slots on the male ends, Diagram 1. Push the pipe sections completely together, then twist-lock one section clockwise approximately one-quarter turn, until the two sections are fully locked. The female locking lugs will not be visible from the outside, on the Black Pipe or fittings. They may be located by examining the inside of the female ends.

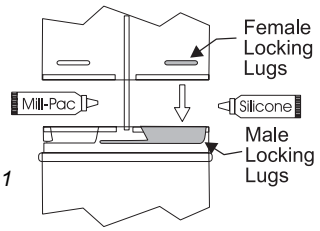

Diagram 1

Note: Apply sealant "Mill-Pac" to inner pipe and high temperature silicone sealant to outer pipe on every twist-lock joint.

b) Horizontal runs of flue must be supported every three feet. Wall straps are available for this purpose.

5) Mark the wall for a 10" x 10" (254mm x 254mm) square hole. The center of the square hole should line up with the centerline of the horizontal pipe. Cut and frame the 10 inch (254mm) square hole in the exterior wall where the flue will be terminated. If the wall being penetrated is constructed of non-combustible material, i.e. masonry block or concrete, a 7"(178mm) dia. (7-1/2"(191mm) dia. for flex) hole is acceptable.

Note: With Dura-Vent, the minimum height is achieved by installing a 90° elbow directly to the flue adaptor.

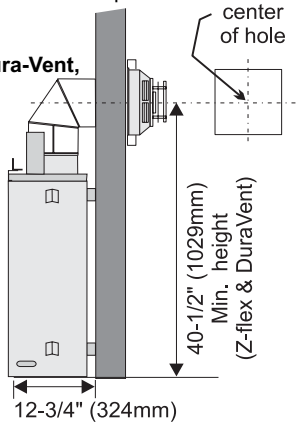

Diagram 2

Note:

a) The horizontal run of flue must be level, or have a 1/4 inch (6mm) rise for every 1 foot (.3m) of run towards the termination. Never allow the flue to run downward. This could cause high temperatures and may present the possibility of a fire.

b) The location of the horizontal flue termination on an exterior wall must meet all local and national building codes, and must not be blocked or obstructed. For External Flue Terminal Locations, see diagram in the "Exterior Flue Termination Locations" section.

6) The arrow on the flue cap should be pointing up. Insure that the 1-1/2" clearances to combustible materials are maintained. Install the termination cap, diagram 5.

The four wood screws provided should be replaced with appropriate fasteners for stucco, brick, concrete, or other types of sidings.

Note: If installing termination on a siding covered wall, a vinyl siding standoff or furring strips must be used to ensure that the termination is not recessed into the siding.

7) Before connecting the horizontal run of flue pipe to the flue termination, slide the Wall Thimble (Part # 620-926) over the flue pipe.

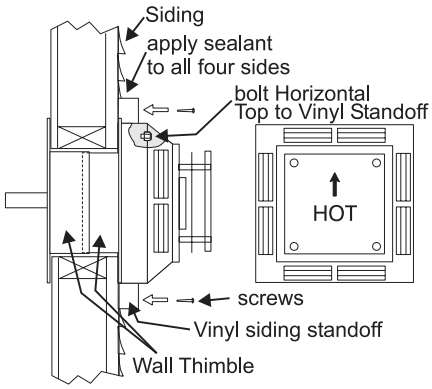

Diagram 3

8) Slide the appliance and flue assembly towards the wall carefully inserting the flue pipe into the flue cap assembly. It is important that the flue pipe extends into the flue cap sufficient distance so as to result in a minimum pipe overlap of 1-1/4 inches. Secure the connection between the flue pipe and the flue cap by attaching the two sheet metal strips extending from the flue cap assembly into the outer wall of the flue pipe. Use the two sheet metal screws provided to connect the strips to the pipe section. See Diagram 4.

9) Install wall thimble in the center of the 10" square and attach with wood screws (Diagram 5).

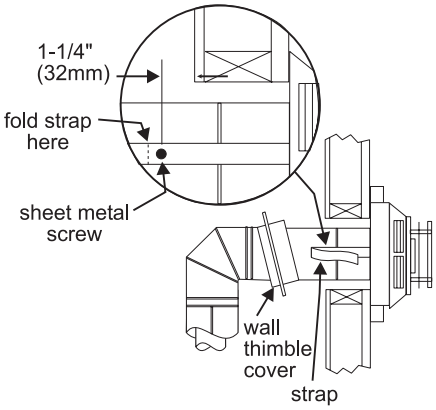

Diagram 4

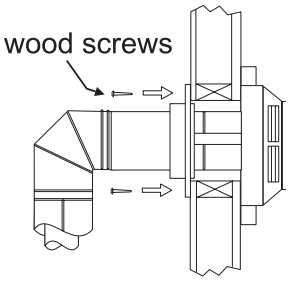

Diagram 5

VERTICAL TERMINATIONS

1) Maintain the 1-1/4" (32mm) clearances (air spaces) to combustibles when passing through ceilings, walls, roofs, enclosures, attic rafter, or other nearby combustible surfaces. Do not pack air spaces with insulation. Check seciotn "Simpson Dura-vent Flueing" for the maximum vertical rise of the flueing system and the maximum horizontal offset limitations.

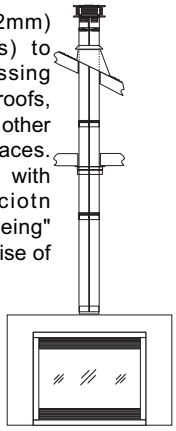

Diagram 1

2) Set the gas appliance in its desired location. Drop a plumb bob down from the ceiling to the position of the appliance flue exit, and mark the location where the flue will penetrate the ceiling. Drill a small hole at his point. Next, drop a plumb bob from the roof to the hole previously drilled in the ceiling, and mark the spot where the flue will penetrate the roof. Determine if ceiling joists, roof rafters or other framing will obstruct the flueing system. You may wish to relocate the appliance or to offset, as shown in Diagram 2 to avoid cutting load bearing members.

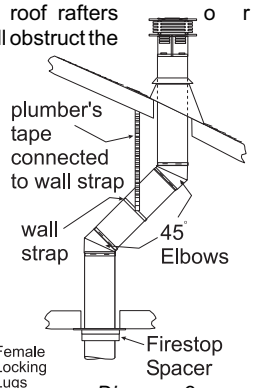

Diagram 2

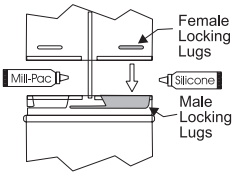

Note: Apply sealant "Mill-Pac" to inner pipe and high temperature silicone sealant to outer pipe on every twist-lock joint.

3) A Firestop spacer must be installed in the floor or ceiling of every level. To install the Firestop spacer in a flat ceiling or wall, cut a 10 inch square hole. Frame the hole as shown in Diagram 3 and install the firestop.

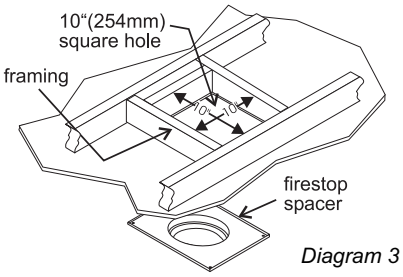

Diagram 3

4) Assemble the desired lengths of pipe and elbows. Ensure that all pipes and elbow connections are in the fully twist-locked position and sealed.

5) Cut a hole in the roof centered on the small drilled hole placed in the roof in Step 2. The hole should be of sufficient size to meet the minimum requirements for clearance to combustibles of 1-1/2" (38mm). Slip the flashing under the shingles (shingles should overlap half the flashing) as per Diagram 4.

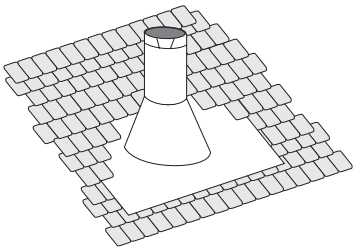

Diagram 4: The upper half of the flashing is installed under the roofing material and not nailed down until the chimney is installed. This allows for small adjustments.

6) Continue to assemble pipe lengths.

Note: If an offset is necessary in the attic to avoid obstructions, it is important to support the flue pipe every 3 feet, to avoid excessive stress on the elbows, and possible separation. Wall straps are available for this purpose (Diagram 2).

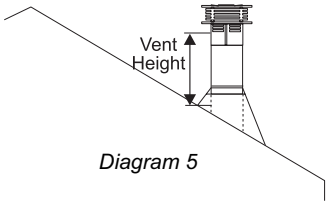

Diagram 5

Roof Pitch	Minimum Flue Height	
	Feet	Meters
flat to 7/12	2	0.61
over 7/12 to 8/12	2	0.61
over 8/12 to 9/12	2	0.61
over 9/12 to 10/12	2.5	0.76
over 10/12 to 11/12	3.25	0.99
over 11/12 to 12/12	4	1.22
over 12/12 to 14/12	5	1.52
over 14/12 to 16/12	6	1.83
over 16/12 to 18/12	7	2.13
over 18/12 to 20/12	7.5	2.29
over 20/12 to 21/12	8	2.44

Galvanized pipe is desirable above the roofline due to its higher corrosion resistance. Continue to add pipe sections through the flashing until the height of the flue cap meets the minimum height requirements specified in Diagram 5 or local codes. Note that for steep roof pitches, the vertical height must be increased. A poor draft, or down drafting can result from high wind conditions near big trees or adjoining roof lines, in these cases, increasing the flue height may solve the problem.

7) Ensure flue is vertical and secure the base of the flashing to the roof with roofing rails, slide storm collar over the pipe section and seal with a mastic.

8) Install the vertical termination cap by twist-locking it.

Note: Any closets or storage spaces, which the flue passes through must be enclosed.

Offset Chart

GS 6"(152mm) Nominal Diameter ID					
Offset		Pipe Length (L)		Height	
inches	mm	inches	mm	inches	mm
4 ¾	121	0	0	13 1/4	337
9	229	6	152	17 1/2	445
11 1/4	286	9	229	19 1/2	495
13 1/4	337	12	305	21 3/4	552
21 3/4	552	24	610	30 1/4	768
30 1/4	768	36	914	39	991
38	965	48	1219	47	1194

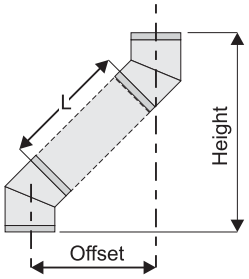

PG36-NG4 System Data	
For 0 to 4500 feet altitude **Burner Inlet Orifice Sizes:** #37(2.65mm)	
Max. Input Rating **Min. Input Rating**	33 mj 20 mj
Supply Pressure	min.1.13 kPa
Manifold Pressure (High)	0.9 kPa
Electrical: 240 V A.C. System. **Circulation Fan**: variable speed 240 CFM. **Log Set**: Ceramic fibre, 7 per set. **Flue System:** Simpson Dura-Vent Direct Vent System or Regency® Direct Vent System (Flex)	

PG36-LPG4 System Data	
For 0 to 4500 feet altitude **Burner Inlet Orifice Sizes:** #52 (1.61mm)	
Max. Input Rating **Min. Input Rating**	31 mj 18 mj
Supply Pressure	min 2.75 kPa
Manifold Pressure (High)	2.6 kPa
Electrical: 240 V A.C. System. **Circulation Fan**: variable speed 240 CFM. **Log Set**: Ceramic fibre, 7 per set. **Flue System:** Simpson Dura-Vent Co Axial Flue System	

GAS CONNECTION

The gas line should be rigid pipe. Copper may also be used if approved by AS5601-2004.

The gas connection at the valve is 1/2 male. For minimum and maximum supply pressure see the System Data Table.

GAS PIPE PRESSURE TESTING

The appliance must be isolated from the gas supply piping system by closing its individual manual shut-off valve during any pressure testing of the gas supply piping system at test pressures equal to or less than 1/2 psig. (3.45 kPa). Disconnect piping from valve at pressures over 3.45 kPa (14" w.c.).

The manifold pressure is controlled by a regulator built into the gas control, and should be checked at the pressure test point.

Note: ***To properly check gas pressure, both inlet and manifold pressures should be checked using the valve pressure ports on the valve.***

1) Make sure the valve is in the "OFF" position.

2) Loosen the "IN" (# 3) and/or "OUT" (# 4) pressure tap(s), turning counterclockwise with a 1/8" wide flat screwdriver.

3) Attach manometer to "IN" and/or "OUT" pressure tap(s) using a 5/16" (8mm) ID hose.

4) Seal and or check the pilot outlet (# 8)

5) The pressure check should be carried out with the unit burning and the setting should be within the limits specified on the safety label.

6) When finished reading manometer, turn off the gas valve, disconnect the hose and tighten the screw (clockwise) with a 1/8" flat screwdriver. *Screw should be snug, but do not over tighten.*

SIT 845 VALVE DESCRIPTION

1) On-Off Solenoid Valve EV1
2) On-Off Solenoid Valve EV2
3) Inlet Pressure Test Point
4) Outlet Pressure Test Point
5) Connection for Pressure Regulator / Combustion Chamber Compensation
6) Pressure Regulator for Minimum and Maximum Outlet Pressure
7) Gas Outlet Pressure Electric Modulator
8) Pilot Outlet
9) Main Gas Outlet
10) Side Outlet
11) Main Gas Inlet

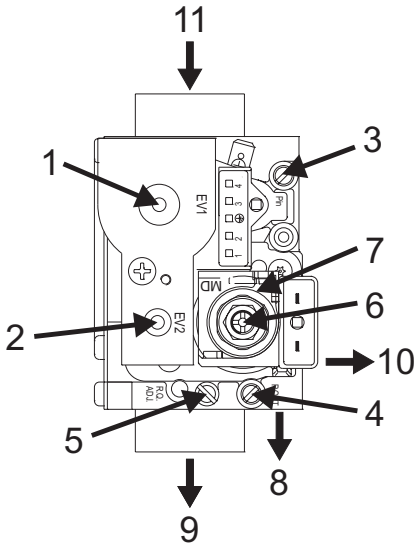

AERATION ADJUSTMENT

The air shutter can be adjusted by moving the adjusting wire up or down. The wire is accessed through the bottom louvre opening. Open the air shutter for a blue flame or close for a yellower flame. The burner aeration is factory set but may need adjusting due to either the local gas supply or altitude. This adjustment is performed by the gas fitter.

Minimum Air Shutter Opening:
8 mm NG
Full Open LPG

CAUTION: *Carbon will be produced if air shutter is closed too much.*

Note: Any damage due to carboning resulting from improperly setting the aeration controls is NOT covered under warranty.

Closed - Tall yellow
Open - Short Blue

Conversion From NG To LPG Kit #513-968

THIS CONVERSION MUST BE DONE BY A QUALIFIED GAS FITTER IF IN DOUBT DO NOT DO THIS CONVERSION!!

LPG Conversion Kit Contains:

Qty.	Part #	Description
1	904-390	Burner Orifice #52
1	904-529	5/32" Allen Key
1	918-590	Label "Converted to LP"
1	908-528	Red "LPG" label
1	910-037	#30 ULPG Pilot Orifice
1	918-577	Instruction Sheet

1) Shut off the gas supply and unplug the power cord.

2) Carefully remove the glass, logs and lava rock.

3) Remove burner.

4) Remove burner orifice with a 1/2" wrench and discard. Use a wrench to hold on to the elbow behind the orifice.

5) Reinstall new burner orifice stamped #52 and tighten.

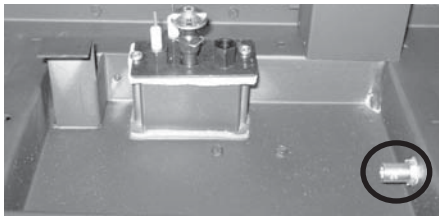

Burner Orifice

6) Pull out the pilot hood by hand.

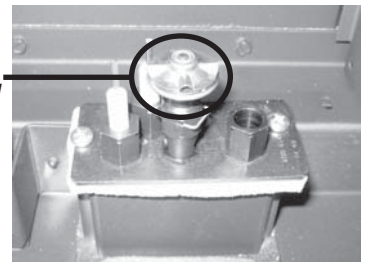

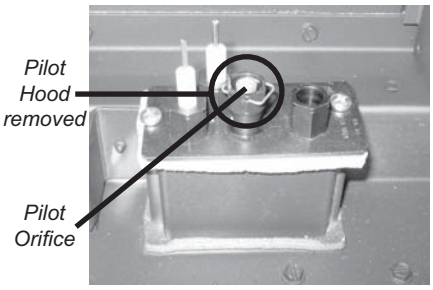

7) Remove the pilot orifice with the allen key.

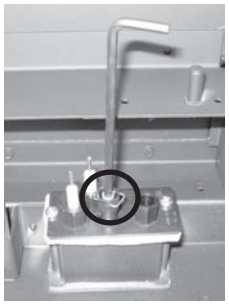

8) Put in the new LPG orifice with the allen key. Then put back the pilot hood.

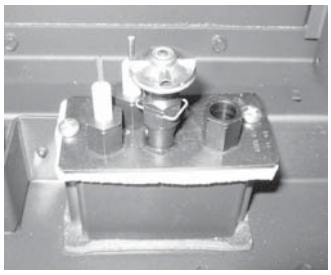

9) Adjust the burner aeration setting to and re-install the burner.

10) Open the bottom louver.

11) Remove the front cover by undoing the 2 screws.

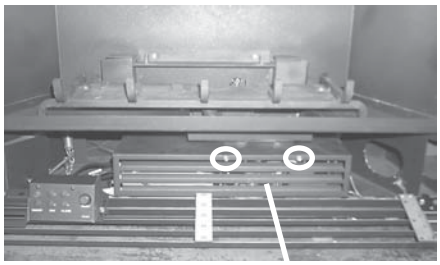

12) Stick the conversion label "This unit has been converted to LPG" over top of the serial number decal.

13) Replace the yellow "NG" label with the red "LPG" label.

14) Carefully pull out the control box from underneath the firebox.

Note: The control box is held in place with velcro.

15) Remove the heat shield from the ECS box by undoing the 2 screws.

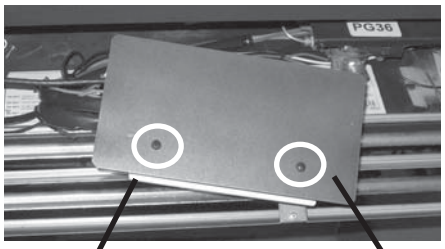

ECS Box *Heat Shield*

16) Remove the control box cover by undoing the 3 screws. Maneuver through antenna.

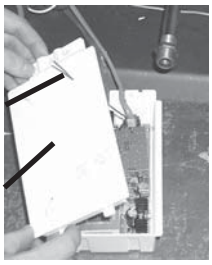

Antenna

Control Box Cover

17) Remove the jumper using a plier.

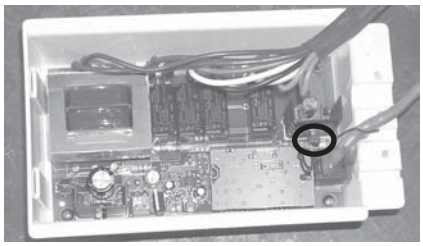

Jumper Location

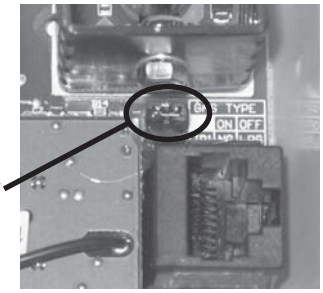

Jumper

18) Stick the conversion label "This unit has been converted to LPG" on the control box cover.

19) Reverse steps 15 and 14.

20) Turn on gas supply and plug in power cord.

21) ***Adjusting the Outlet Pressure:*** All the adjustments must be carried out in the following order:

Remove the modulator plastic cap (A) using needle nose pliers.

Maximum pressure: Turn the unit ON to its highest input rating. Screw in the nut (B) to increase the outlet pressure and screw it out to decrease it. Use a 10 mm wrench.

Note: The outlet pressure must be set to maximum 2.75 kPa.

Minimum pressure: Remove one of the cables connected to the electric modulator. Keeping the nut (B) blocked, screw in the screw (C) to increase the pressure and screw it out to decrease it. Use a screwdriver 6 x 1 blade.

Note: The outlet pressure must be set to minimum 0.74 kPa.

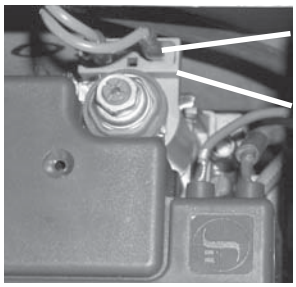

Cable

Electric Modulator

After carrying out all adjustments, block the setting screws with paint, taking care not to obstruct the breather orifice of the pressure.

Put back the modulator plastic cap.

WARNING: To ensure the correct operation of the modulator it is necessary that the plastic cap (A) is returned to its original location.

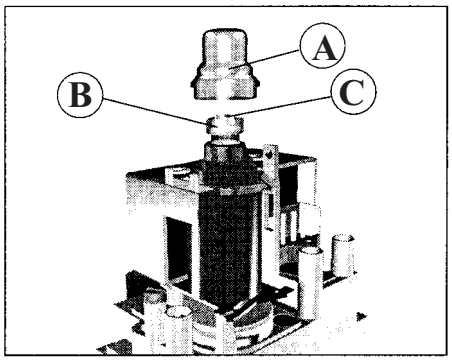

22) At the end of all setting and adjustment operations, check electrical insulation and gas leaks.

23) Check operation of flame control.

24) Check for proper flame appearance and glow on logs.

Installer Notice:
These instructions must be left with the appliance.

OPTIONAL BRICK PANELS

1) Undo the bottom 2 door latches and open and remove glass door. Remove logs.

Note: The logs must not be in the unit.

2) Insert the back brick panel first by carefully slipping it between the back wall of the firebox and the rear log bracket.

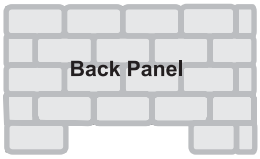

3) Put the side panels in next. Slide them in from the front and push them flat up against the wall. Be very careful not to scratch them on the firebox hardware.

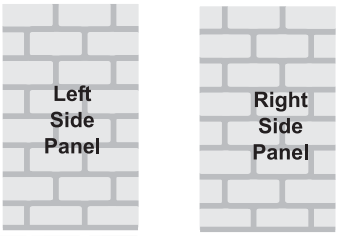

4) Install the 2 brick retaining clips, one on each side.

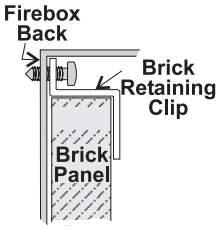

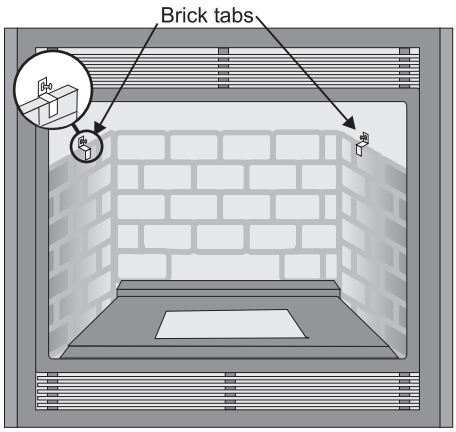

LOG SET INSTALLATION

Read the instructions below carefully and refer to the diagrams. If logs are broken do not use the unit until they are replaced. Broken logs can interfere with the pilot operation.

The gas log kit (Part # 512-930) contains the following pieces:

a) 02-49 Rear Log
b) 02-55 Middle Left Log
c) 02-50 Front Left Log
d) 02-53 Center Left Log
e) 02-51 Front Bottom Log
f) 02-54 Center Right Log
g) 02-52 Middle Right Log
h) Embers
i) Vermiculite

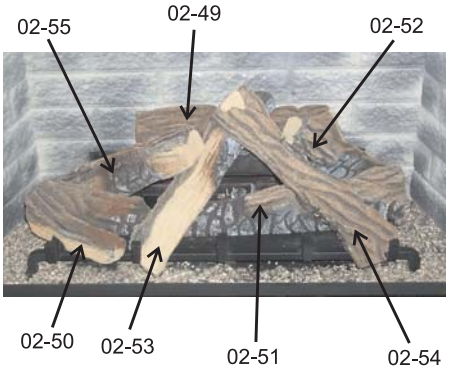

The "02" refer numbers (i.e. 02-49) are molded into the rear of each log.

NOTE: If you will be installing the optional Brick Panels, install the Brick Panels prior to installing the logs.

1) Carefully remove the logs from the box and unwrap them. The logs are fragile, handle with care - **do not force into position.**

2) Sprinkle the vermiculite around the firebox base.

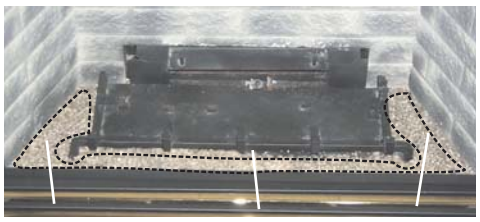

3) Place the Log 02-49 on the rear log support pins with the flat side to the back.

4) Place Log 02-51 on the front right side of the burner. Push the back of the log against the 2 brackets with the notch on the bottom right side of the log fitting into the right side of the grate.

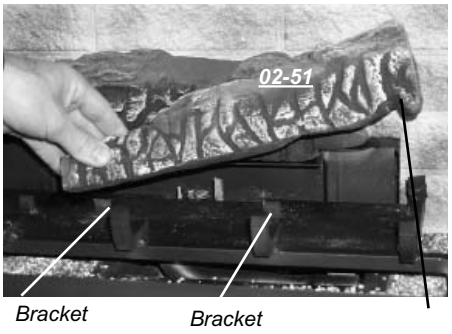

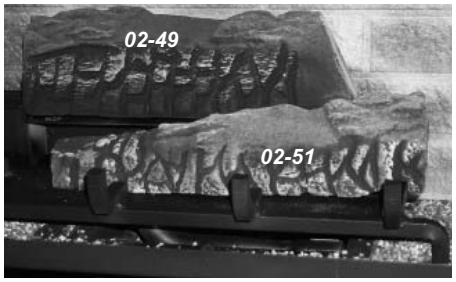

5) Position Log 02-53 across the cutouts in Logs 02-49 and 02-51 with the notch on the left side of the log fitting into the 2nd grate tab.

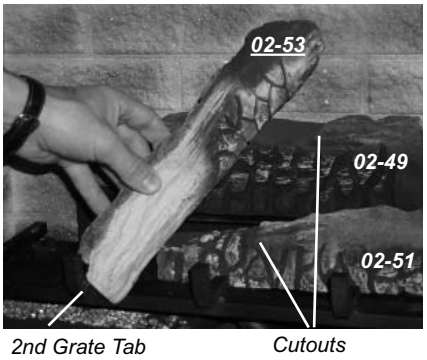

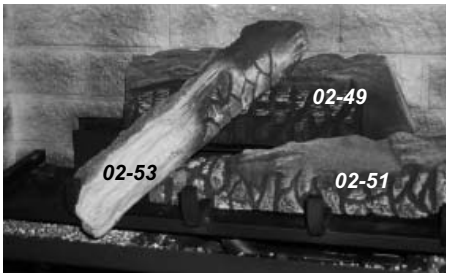

6) Place the bottom left front edge of Log 02-55 against the rear bracket on the burner tray and rest the log on the cutout on Log 02-53.

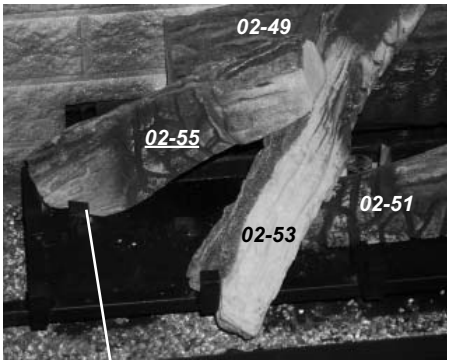

Rear Bracket

7) Sit Log 02-50 on the front left side of the burner. Push the back of the log against the 2 front brackets with the notch on the bottom of the log fitting into the first grate tab.

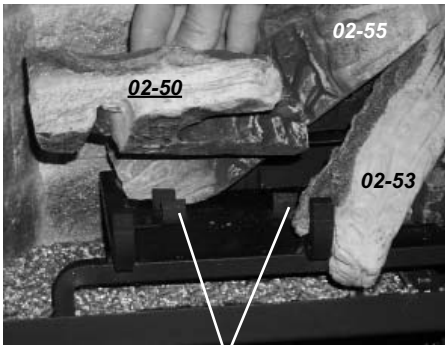

Front Brackets

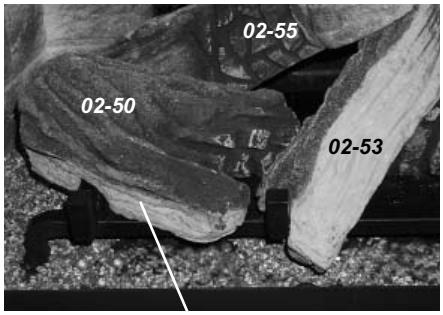

Notch

8) Position Log 02-54 across the cutouts in Logs 02-51 and 02-53. The notch in the bottom right end fitting against the 5th grate tab.

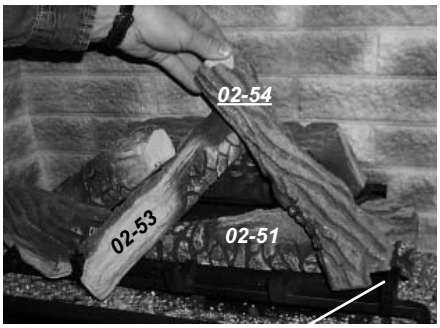

5th Grate Tab

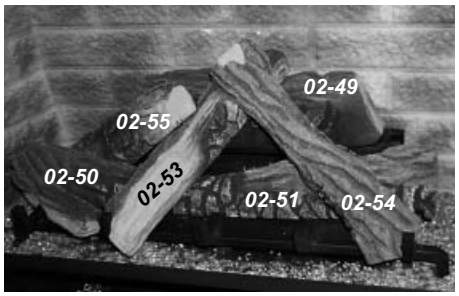

9) Place Log 02-52 between Logs 02-51 and 02-49 and on the indentation on Log 02-54. The bottom right end sits behind the rear grate tab.

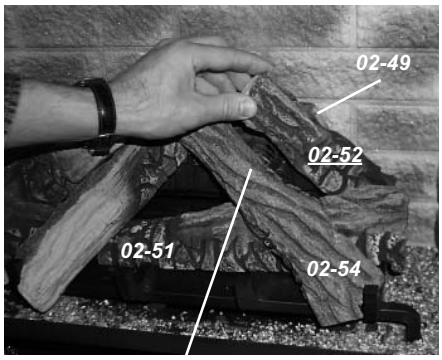

Log indentation

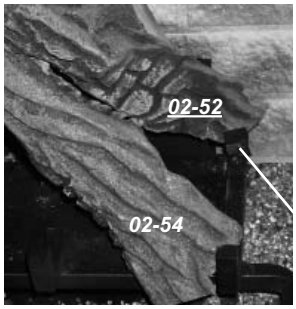

Rear Grate Tab

Photo shows rear grate tab. Log 02-51 was removed to show the positioning of Log 02-52.

10) Place the embers on the front of the burner tray in the places shown on the photo.

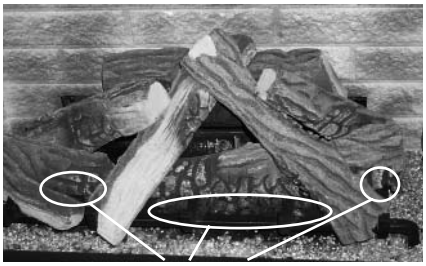

Place embers in these 3 locations on the burner tray.

Embers

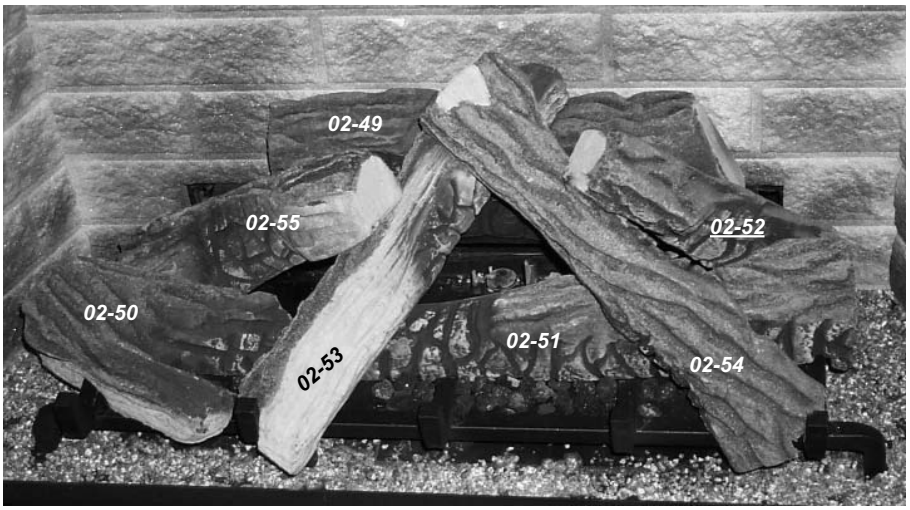

11) Test fire to ensure proper light off (make sure flame flows smoothly from one end of burner to the other). If there is any flame hesitation, check that area for any blockage of the burner ports.

12) Install flush glass and bay glass (if used) as per instructions in this manual.

STANDARD FLUSH DOOR

The standard flush door comes with a black frame. To install the frame, simply hook the top door flange onto the top of the unit and swing the door towards the unit, diagram 1.

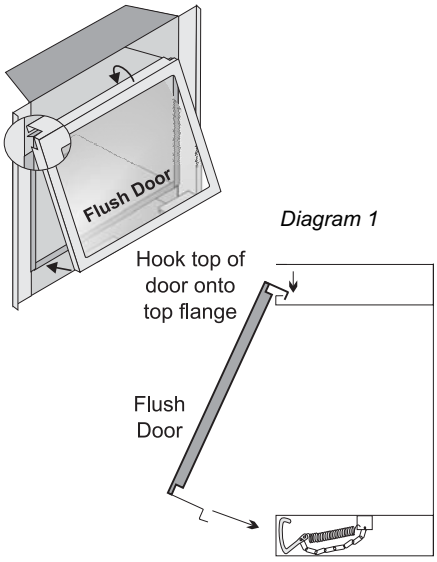

Diagram 1

Be careful that the glass gasket does not roll up; there must be a gap between the gasket and the door lip to ensure that the door sits securely on the unit. Diagram 2.

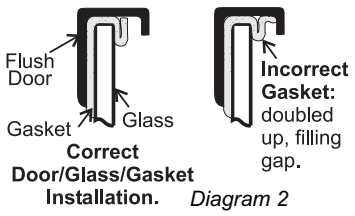

Diagram 2

Use the hook to pull the spring out until you can put the hook into the slot on the bottom door bracket. Repeat for 2nd spring. See diagram 3.

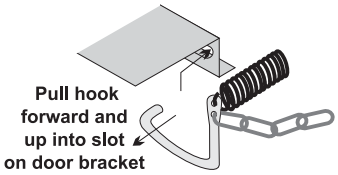

Diagram 3

To remove the flush door, reverse the above steps.

Optional Flush Trim

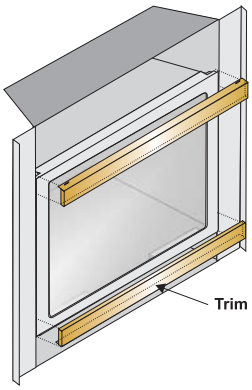

Attach the round magnets to the back of the top trim piece and to the bottom trim piece, then attach trim to the top and bottom of Flush door.

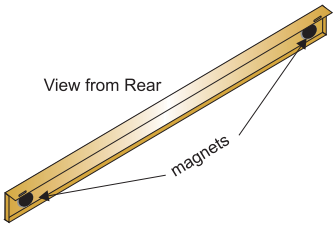

Flush Louvres

1) Install the top louvre by sliding the two bracket clips into the brackets located underneath the top of the firebox.

2) The bottom louvre has a hinge that is attached (2 screws per hinge) to the lip on bottom of the unit.

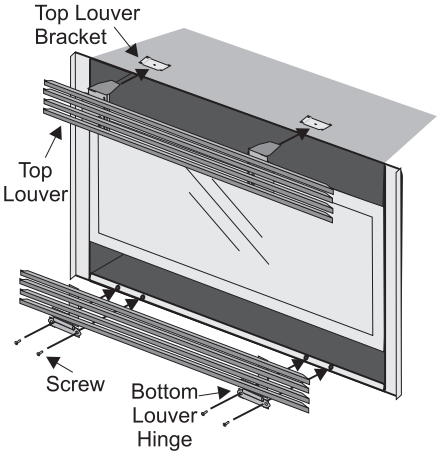

Note: Top and bottom louvres are different.

PREMIUM FLUSH FRONT INSTALLATION

1) Unplug the power source.

2) Remove the top louver (if fitted) by carefully pulling it out.

3) Install the premium flush front top louver in place by sliding the louver tabs into the louver brackets on the inside top of the firebox.

Louver Tab

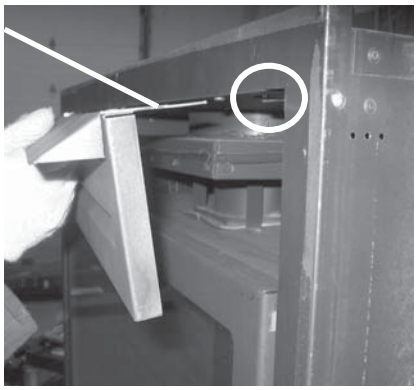

Premium Flush Front Top Louver in place.

4) Open the bottom louver.

5) Remove the manual control switch bracket from the bottom louver (if fitted) by undoing the 2 screws.

Manual Control Switch Bracket

6) Remove the bottom louver (if fitted) by undoing the 2 screws which secure the louver to the hinges on the left and right side.

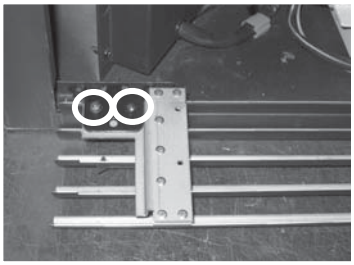

7) Remove the heat shield by undoing the 2 screws.

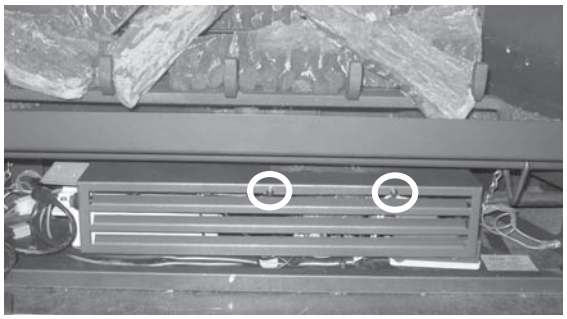

8) Carefully disconnect the reset switch wires.

9) Lift the module off of the velcro from the base of the firebox and pull out slightly.

10) Disconnect the wire harness on the module that is connected to the valve.

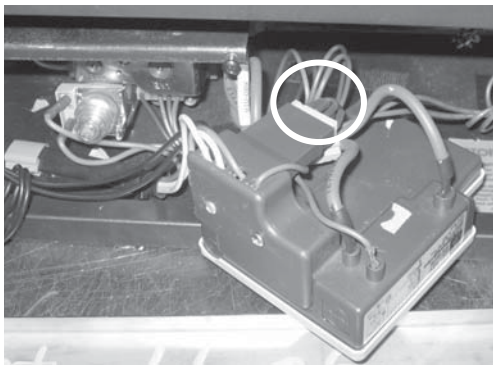

11) Disconnect the wire harness connected to the valve that comes from the module.

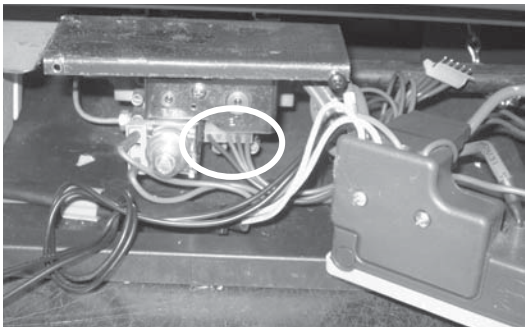

12) Remove the thermodisc cover from the thermodisc plate by undoing the 2 screws and then remove the wire grommet.

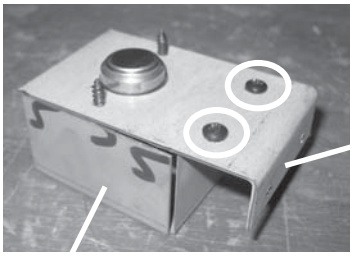

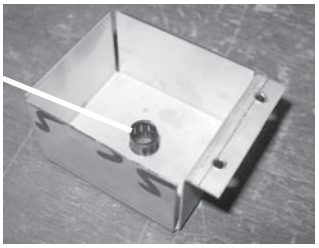

13) Take the black and white wires from the kit and place the grommet thru the wires.

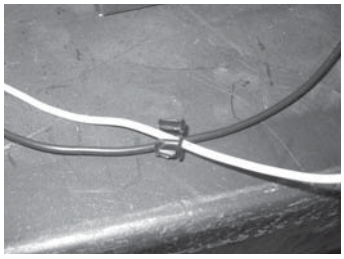

14) Place the wire grommet back into the thermodisc cover with the 2 female ends of the wires inside the cover as shown.

15) Connect the female ends of the black and white wires to the thermodisc.

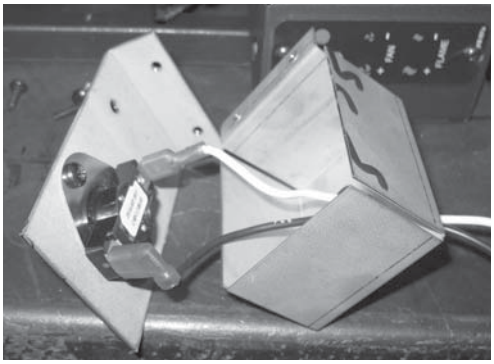

16) Reattach the thermodisc plate to the thermodisc cover using the 2 screws removed in step 12.

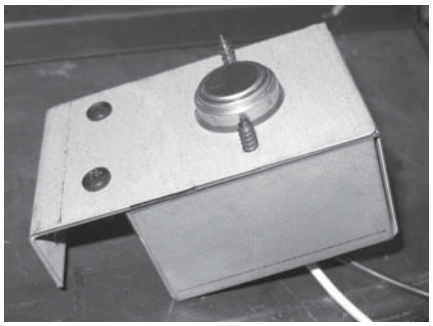

17) Connect the thermodisc wire harness to the new valve/module wire harness. Refer to the wiring diagram for details.

18) Secure the thermodisc plate to the thermodisc bracket.
Important: Thermodisc location is crucial, check the data badge to identify unit and secure to screw location accordingly.

19) Remove the left side bottom hinge bracket by undoing the 2 screws.

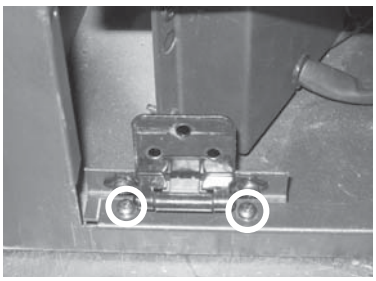

20) Install the supplied hinge to the thermodisc bracket using 2 screws.

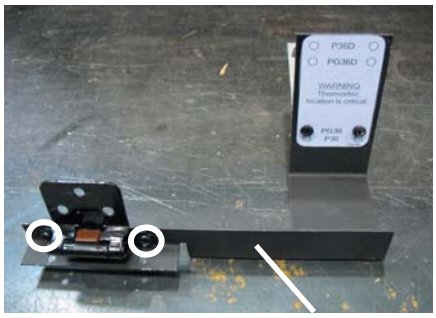

Thermodisc Bracket

21) Slide the thermodisc bracket in to the left side of the unit and align the bracket holes with the screw holes on the firebox flange.

22) Connect new wire harness to the module and to the valve.

Module

Valve

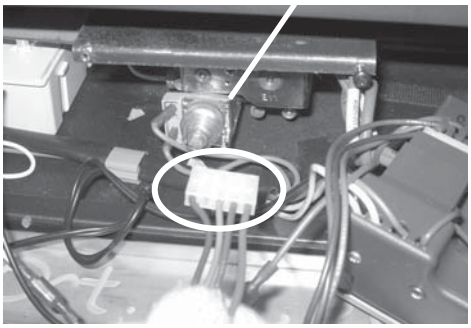

23) Put the module back in place on velcro at the base of the firebox.

24) Secure loose wires using wire clips to the base of the firebox as far back as possible.

25) Reconnect reset switch wires.

26) Re-install heat shield.

27) Mount control switch to the bracket on the bottom louver and secure using 3 screws.

28) Align the bottom louver mounting tab with hinges on the left and right side and secure using 2 screws on each side.

29) Plug in power source.

30) Turn the unit ON using remote control.

31) Press and hold the reset switch for 3 seconds and then release.

32) Close the bottom louver.

NOTE:
The fan must run at minimum speed to prevent the unit from overheating which will cause automatic shutdown via the thermodisc safety switch.

If the thermodisc safety switch shuts the unit down, the unit will need to be reset before restarting the unit after it has cooled down. To reset the unit press and hold the reset switch for 3 seconds and release.

WIRING

This heater requires a 240V A.C. supply for the gas control to operate. A 240V A.C. power supply is needed for the fan/blower operation.

Caution: Ensure that the wires do not touch any hot surfaces and are away from sharp edges.

CAUTION: Label all wires prior to disconnection when servicing controls. Wiring errors can cause improper and dangerous operation.

STANDARD WIRING

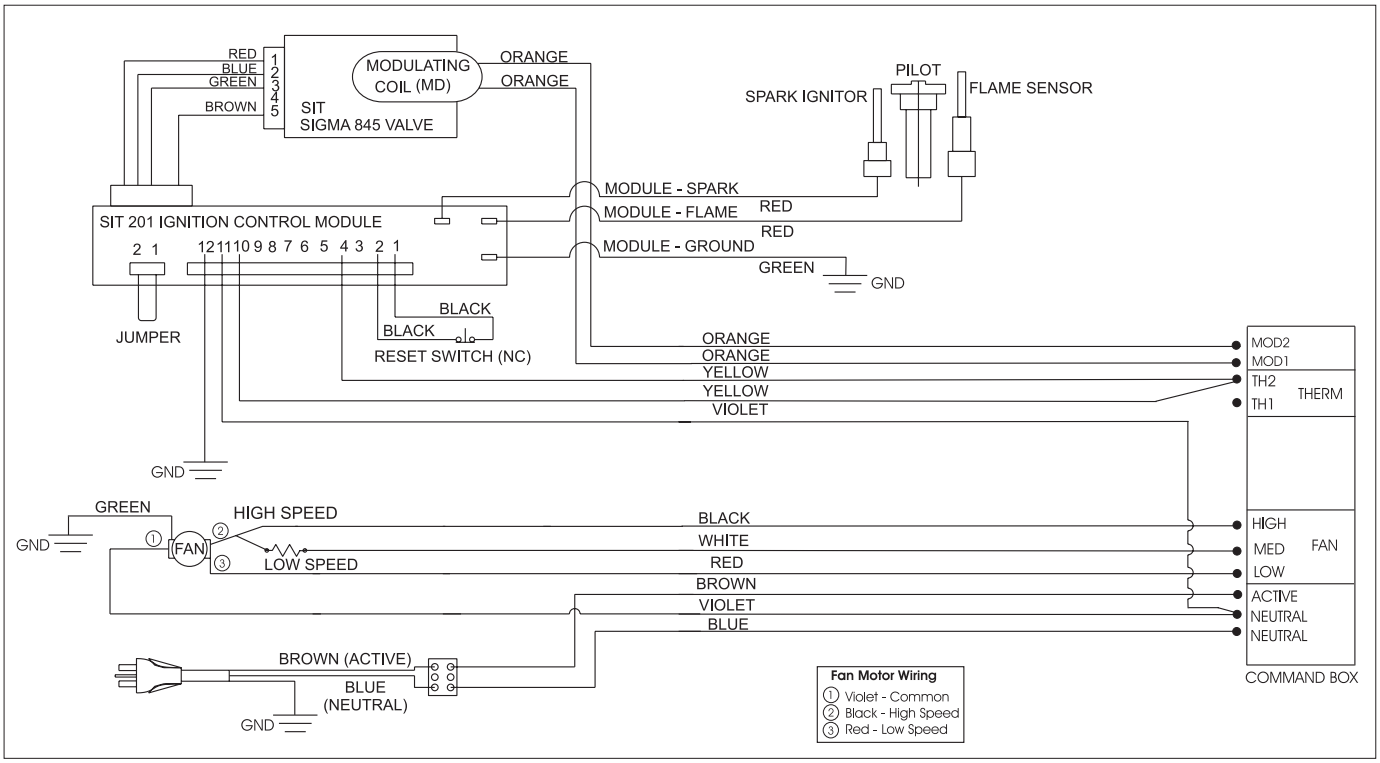

WARNING: Electrical Grounding Instructions
This appliance is equipped with a three pronged (grounding) plug for your protection against shock hazard and should be plugged directly into a properly grounded three-prong receptacle. Do not cut or remove the grounding prong from this plug.

WIRING WITH PREMIUM FLUSH FRONT OPTION

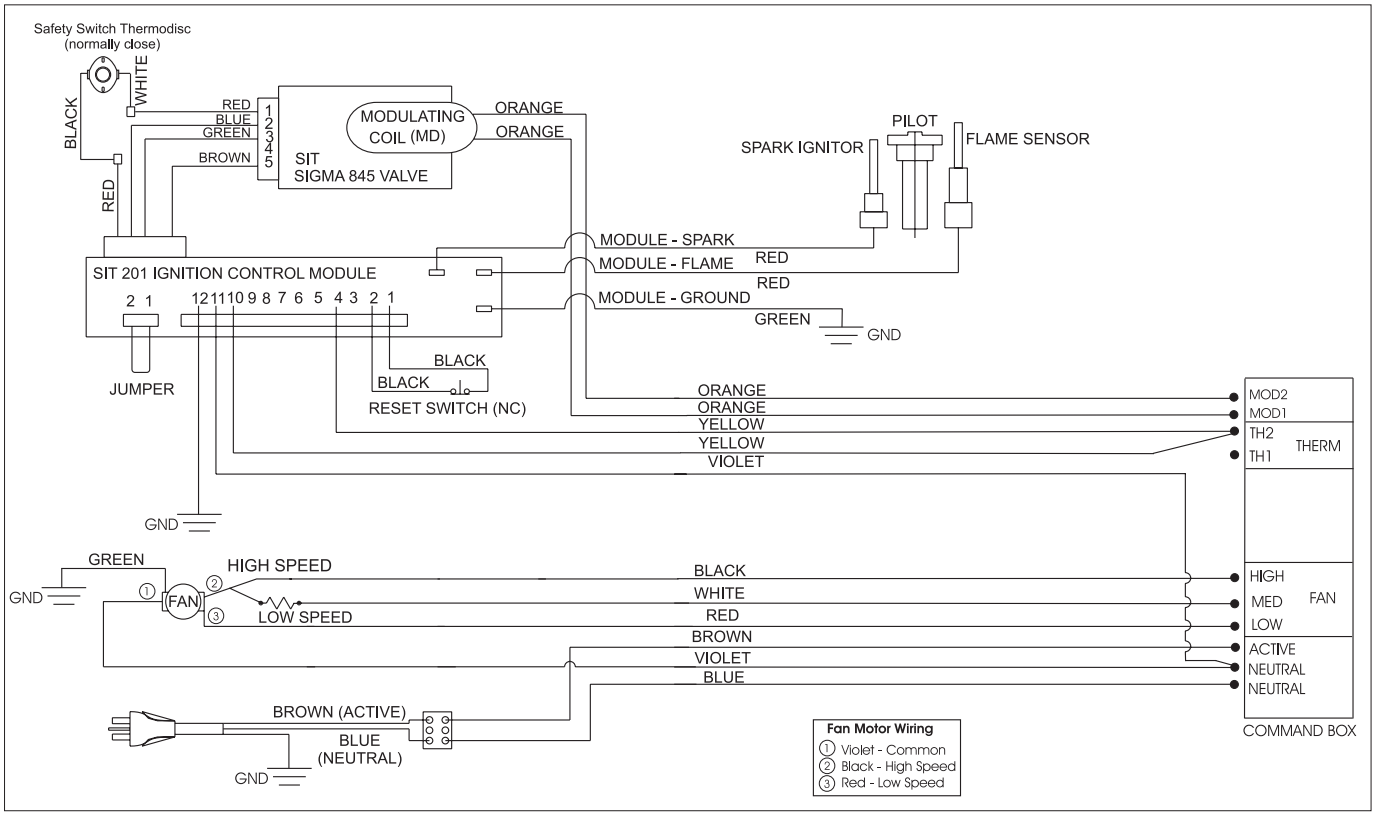

OPERATING INSTRUCTIONS

REMOTE CONTROL

Use the Regency® Remote Control Kit approved for this unit. Use of other systems may void your warranty.

The remote control kit comes with a hand held transmitter and a wall mounting plate.

1) Choose a convenient location to mount the hand held transmitter, protection from extreme heat is very important.

The remote can also be used as a wall thermostat.

OPERATING INSTRUCTIONS

Before operating this appliance, proceed through the following check list.

1) Read and understand these Instructions before operating this appliance.

2) Check to see that all wiring is correct and enclosed to prevent possible shock.

3) Check to ensure there are no gas leaks.

4) Make sure the three pieces of door glass are properly positioned. Never operate the appliance with any of the glass removed or with the door open.

5) Verify that all flueing and the cap is unobstructed.

6) Verify log placement.

LIGHTING INSTRUCTIONS

1) Plug the power cord into a power outlet.

2) Press and release the ON/OFF button once to start the unit.

3) After approximately 3 seconds the spark ignition system will spark for 40 seconds to light the main burner.

4) If the main burner does not light, reset the unit.

RESETTING THE UNIT

1) Open the bottom louvre of the unit.

2) Press and release the reset button, located on the unit's control panel once.

3) Wait for approximately 3 seconds and the pilot sparks can be heard and seen. It would take 2 to 3 seconds for the flame to be lit.

NOTE: A period of 30 seconds must pass before another reset is attempted.

SHUTDOWN INSTRUCTIONS

1) Press the ON/OFF button once.

2) Turn off all electric power to the appliance if service is to be performed.

FIRST FIRE

The **FIRST FIRE** in your heater is part of the paint curing process. To ensure that the paint is properly cured, it is recommended that you burn your fireplace for at least four (4) hours the first time you use it with the fan on.

When first operated, the unit will release an odour caused by the curing of the paint and the burning off of any oils remaining from manufacturing. Smoke detectors in the house may go off at this time. Open a few windows to ventilate the room for a couple of hours. The glass may require cleaning.

NOTE: The main burner will always start on "HIGH" and resume it's last setting after 20 seconds of operation.

NOTE: When the glass is cold and the appliance is lit, it may cause condensation and fog the glass. This condensation is normal and will disappear in a few minutes as the glass heats up.

DO NOT ATTEMPT TO CLEAN THE GLASS WHILE IT IS STILL *HOT*!

DO NOT BURN THE APPLIANCE WITHOUT THE GLASS FRONT IN PLACE.

During the first few fires, a white film may develop on the glass front as part of the curing process. The glass should be cleaned or the film will bake on and become very difficult to remove. Use a non-abrasive cleaner and NEVER clean the glass while it is hot.

ADJUSTING FLAME HEIGHT

There are six flame settings that can be adjusted by pressing and releasing the plus (+) and minus (-) FLAME button.

The FLAME setting button is located on the control panel in behind the pedestal door.

SUMMARY OF CONTROLS

On/Off Button
If the unit is switched off, pressing and releasing this button once will switch the unit on. The unit will resume its last settings.

If the unit is switched on, pressing and releasing this button once will switch the unit off.

Flame:
Increase - If the unit is switched on, pressing and releasing the plus (+) button once will increase the flame height to the next available high setting.

Decrease - If the unit is switched on, pressing and releasing the minus (-) button once will decrease the flame height to the next available low setting.

Fan:
The fan speed is changed by pressing and releasing the fan button.

It operates in 4 modes: OFF, LOW, MEDIUM and HIGH.

PILOT ADJUSTMENT

Periodically check the pilot flames. The correct flame pattern has 3 strong blue flames.

One flowing around the thermocouple, the second flowing across the rear of the burner (it does not have to be touching the burner) and the third flame flowing tangent to the spark ignitor.

NOTE: *If you have an incorrect flame pattern, contact your Regency® dealer for further instructions.*

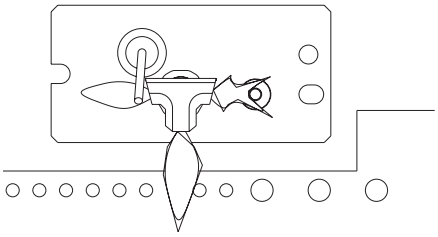

Rear of Burner

An incorrect flame pattern will have small, probably yellow flames, not coming into proper contact with the rear of the burner or thermopile.

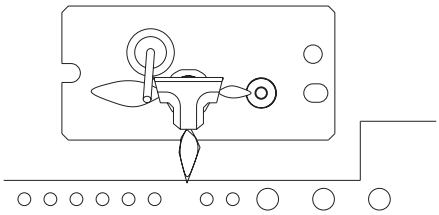

Rear of Burner

NORMAL OPERATING SOUNDS OF GAS APPLIANCES

It is possible that you will hear some sounds from your gas appliance. This is perfectly normal due to the fact that there are various gauges and types of steel used within your appliance. Listed below are some examples. All are **normal operating sounds** and should not be considered as defects in your appliance.

Blower:
Regency® gas appliances use high tech blowers to push heated air farther into the room. It is not unusual for the fan to make a "whirring" sound when ON. This sound will increase or decrease in volume depending on the speed setting of your fan speed control.

Burner Tray:
The burner tray is positioned directly under the burner tube(s) and logs and is made of a different gauge material from the rest of the firebox and body. Therefore, the varying thicknesses of steel will expand and contract at slightly different rates which can cause "ticking" and "cracking" sounds. You should also be aware that as there are temperature changes within the unit these sounds will likely re-occur. Again, this is normal for steel fireboxes.

Gas Control Valve:
As the gas control valve turns ON and OFF, a dull clicking sound may be audible, this is normal operation of a gas regulator or valve.

Unit Body/Firebox:
Different types and thicknesses of steel will expand and contract at different rates resulting in some "cracking" and "ticking" sounds will be heard throughout the cycling process.

COPY OF THE LIGHTING PLATE INSTRUCTIONS

FOR YOUR SAFETY READ BEFORE LIGHTING

This appliance must be installed in accordance with local codes, if any; if not, follow the current CAN1-B149/ANSI Z 223.1 (Australia: AS5601-2004, New Zealand: NZS 5261)

WARNING: If you do not follow these instructions exactly, a fire or explosion may result causing property damage, personal injury or loss of life. Improper installation, adjustment, alteration, service or maintenance can cause injury or property damage. Refer to the owner's information manual provided with this appliance. For assistance or additional information consult a qualified installer, service agency or gas supplier.

A) BEFORE LIGHTING smell all around the appliance area for gas. Be sure to smell next to the floor because some gas is heavier than air and will settle on the floor.

WHAT TO DO IF YOU SMELL GAS
- Do not try to light any appliance
- Do not touch any electric switch, do not use any phone in your building
- Immediately call your gas supplier from a neighbors phone. Follow the gas supplier's instructions.
- If you cannot reach your gas supplier, call the fire department.

B) Do not use this appliance if any part has been under water. Immediately call a qualified service technician to inspect the appliance and to replace any part of the control system and any gas control which has been under water.

This appliance needs fresh air for safe operation and must be installed so there are provisions for adequate combustion and ventilation air.

CAUTION: Hot while in operation. Do not touch. Severe Burns may result. Due to high surface temperatures keep children, clothing and furniture, gasoline and other liquids having fammable vapors away. Keep burner and control compartment clean. See installation and operating instructions accompanying appliance.

LIGHTING INSTRUCTIONS

STOP! Read the safety information above on this label.

1) Plug the power cord into a power outlet.

2) Press and release the ON/OFF button once to start the unit.

3) After approximately 3 seconds the spark ignition system will spark for 25 seconds to light the main burner.

4) If the main burner does not light, check the gas and reset the unit.

TO TURN OFF GAS APPLIANCE

1) Press the ON/OFF button once.

2) Turn off all electric power to the unit if service is to be performed.

DO NOT REMOVE THIS INSTRUCTION PLATE

918-332a

WARNING:
DO NOT SPRAY AEROSOLS IN THE VICINITY OF THIS APPLIANCE WHILE IN OPERATION.

MAINTENANCE INSTRUCTIONS

Any maintenance required accessing the glass door of the unit must be performed by an authorized service person.

1) Always unplug the power cord before cleaning. For relighting, refer to lighting instructions. Keep the burner and control compartment clean by brushing and vacuuming at least once a year. When cleaning the logs, use a soft clean brush as the logs are fragile and easily damaged.

2) Clean glass (never when unit is hot), appliance, louvres, and door with a damp cloth. Never use an abrasive cleaner. The gold louvres (and optional gold door) may be scratched if abrasives are used to clean them.

The heater is finished in a heat resistant paint and should only be refinished with heat resistant paint (not with wall paint). Regency® uses StoveBright Paint - Metallic Black #6309.

3) Make a periodic check of burner for proper position and condition. Visually check the flame of the burner periodically, making sure the flames are steady; not lifting or floating. If there is a problem, call an authorized service person.

4) The appliance and flueing system must be inspected before use, and at least annually, by an authorized field service person, to ensure that the flow of combustion and ventilation air is not obstructed.

During the annual service call, the burners should be removed from the burner tray and cleaned. Replace the embers - do not block the pilot or burner ports.

5) Keep the area near the appliance clear and free from combustible materials, gasoline and other flammable vapours and liquids.

WARNING: CHILDREN AND ADULTS SHOULD BE ALERTED TO THE HAZARDS OF HIGH SURFACE TEMPERATURE AND SHOULD STAY AWAY TO AVOID BURNS OR CLOTHING IGNITION. YOUNG CHILDREN SHOULD BE CAREFULLY SUPERVISED WHEN THEY ARE IN THE SAME ROOM AS THE APPLIANCE.

CAUTION: ANY SAFETY SCREEN OR GUARD REMOVED FOR SERVICING AN APPLIANCE MUST BE REPLACED PRIOR TO OPERATING THE APPLIANCE.

CLOTHING OR OTHER FLAMMABLE MATERIAL SHOULD NOT BE PLACED ON OR NEAR THE APPLIANCE.

DO NOT USE THIS APPLIANCE IF ANY PART HAS BEEN UNDER WATER. IMMEDIATELY CALL AN AUTHORIZED SERVICE TECHNI CIANTOINSPECTTHEAPPLIANCE AND TO REPLACE ANY PART OF CONTROL SYSTEM AND ANY GAS CONTROL WHICH HAS BEEN UNDER WATER.

6) Verify proper operation after servicing.

General Flue Maintenance

Conduct an inspection of the flueing system semi-annually. Recommended areas to inspect as follows:

1) Check the Flueing System for corrosion in areas that are exposed to the elements. These will appear as rust spots or streaks, and in extreme cases, holes. These components should be replaced immediately.

2) Remove the Cap, and shine a flashlight down the Flue. Remove any bird nests, or other foreign material.

3) Check for evidences of excessive in the inner liner, and subsequently dripping out the joints, Continuous condensation can cause corrosion of caps, pipe, and fittings. It may be caused by having excessive lateral runs, too many elbows, and exterior portions of the system being exposed to cold weather.

4) Inspect joints, to verify that no pipe sections or fittings have been disturbed, and consequently loosened. Also check mechanical supports such as Wall Straps, or plumbers' tape for rigidity.

GOLD or BRASS LOUVRES & TRIM

The 24 carat gold plated or brass finish on the trim requires little maintenance, and need only be cleaned with a damp cloth. DO NOT use abrasive materials or chemical cleaners, as they may harm the finish and void the warranty. **Clean any fingerprints off before turning the unit on. If the top louvres start to discolour, check the door gasket seal and replace if necessary.**

LOG REPLACEMENT

The unit should never be used with broken logs. Turn off the gas valve and allow the unit to cool before opening door and carefully remove the logs. If for any reason a log should need replacement, you must use the proper replacement log. The position of these logs must be as shown in the diagrams under Log Installation.

Note: Improper positioning of logs may create carbon build-up and will severely alter the unit's performance which is not covered under warranty.

GLASS GASKET

If the glass gasket requires replacement use 5/8" flat glass gasket for the Bay Front (Part # 936-243) and a tadpole glass gasket for the Flush Front (Part # 936-155).

DOOR GLASS

Your Regency® fireplace is supplied with high temperature, 5 mm Neoceram ceramic glass that will withstand the highest heat that your unit will produce. If your glass requires cleaning, we recommend using an approved glass cleaner available at all authorized dealers. Do not use abrasive materials. Do not clean the glass when hot.

In the event that you break your glass by impact, purchase your replacement from an authorized Regency® dealer only, and follow our step-by-step instructions for replacement.

WARNING: Do not operate the appliance with the glass panels removed, cracked or broken. Replacement of the glass panels should be done by a licensed or qualified service person.

Caution: Wear gloves when removing damaged or broken glass.

Flush Glass Replacement

Remove the flush door front (as per instructions in the "Standard Flush Door" section). Remove the 4 glass clips from each corner. Slide in the new replacement glass. Push the 4 glass clips back onto the frame. **The glass must have gasketing around it.**

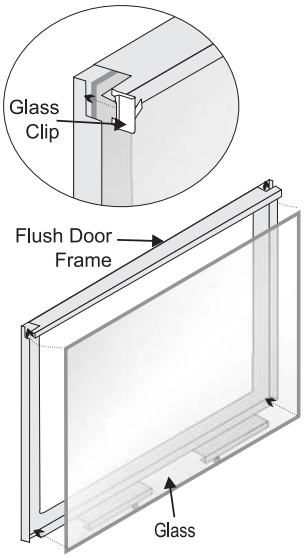

Bay Glass Replacement

1) Remove the door from the unit and place on a soft surface to prevent scratching.

2) Remove the nuts holding the glass clips in place and remove.

3) Replace the glass. **The glass must have gasketing around it.**

5) Reverse the previous steps, replace the glass clips and fasten with the nuts but do not over tighten, as this can break the glass.

6) Replace door on the Gas log fireplace and check the seal.

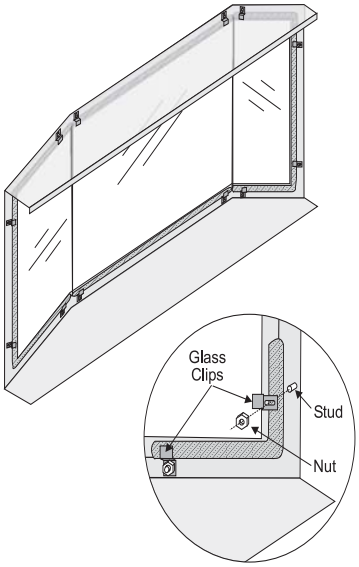

REMOVING VALVE TRAY

1) Shut off the gas supply.

2) Remove the louvres.

3) Open the flush door and remove door.

4) Remove the logs.

5) Remove the burner/grate assembly by removing the left and right side Philips head screws and then lift the burner assembly out.

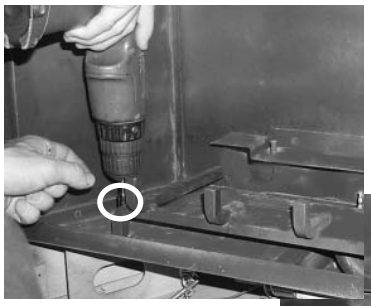

Left Side Shown

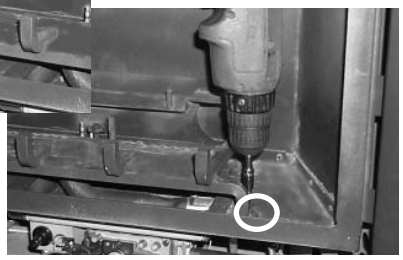

Right Side Shown

Lift out the burner/grate assembly.

6) Remove the rear log log stand by removing the 2 screws.

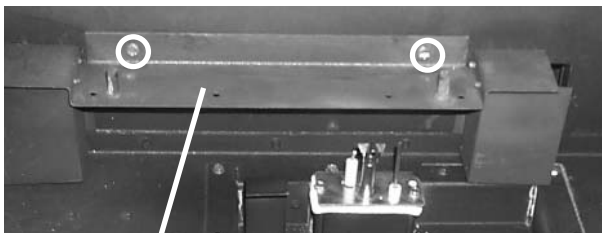

Rear Log Stand

7) Disconnect the inlet gas line.

8) Remove the 10 Philips screws which secure the valve tray assembly.

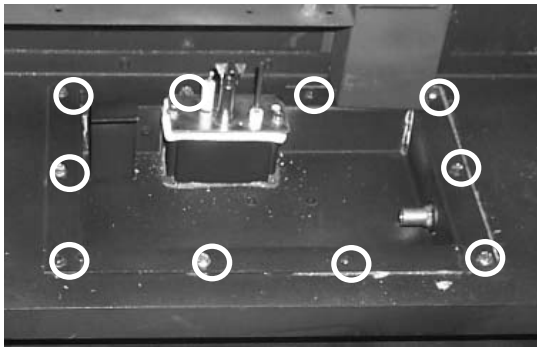

9) Remove the front cover by removing the 2 screws which secure the front cover to the valve tray.

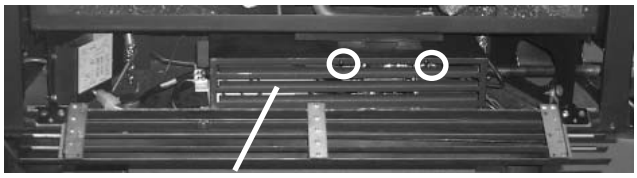

Front Cover

10) Unplug the 2 orange wires from the Gas Pressure Electric Modulator.

11) Unplug the 5 pin Molex Connector from the valve.

12) Unplug the ignitor and flame cables from the module and then lift the entire valve tray assembly out.

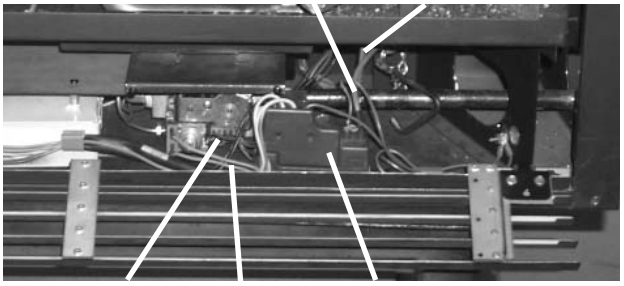

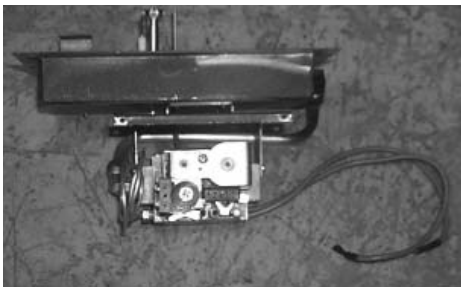

Valve Tray Assembly

13) To replace the burner tray assembly reverse these instructions.

14) Check for any gas leaks.

15) Check for proper flame appearance and glow on logs.

FAN REPLACEMENT

1) Shut off the power supply.

2) Remove the top louvre.

3) Remove the glass door.

4) Remove the 3 screws which secure the manual control box to the bottom louvre and remove the bottom louvre.

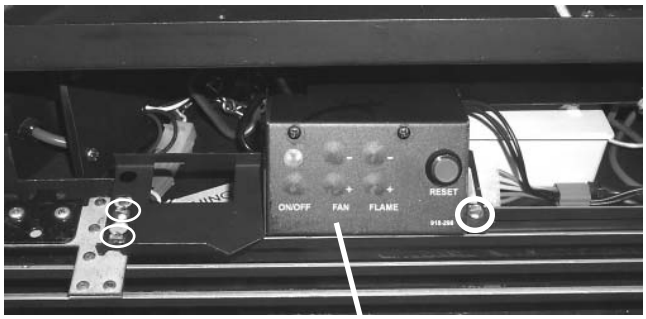

Manual Control Box

5) Unplug the 6 pin Molex connector and carefully pull out the ECS box.

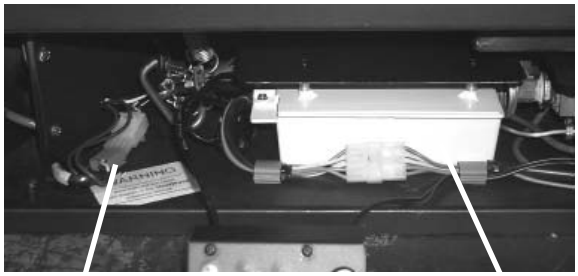

6 Pin Molex Connector *ECS Box*

6) Remove the electric cover by undoing the 2 screws, pull out the grommet and the harness.

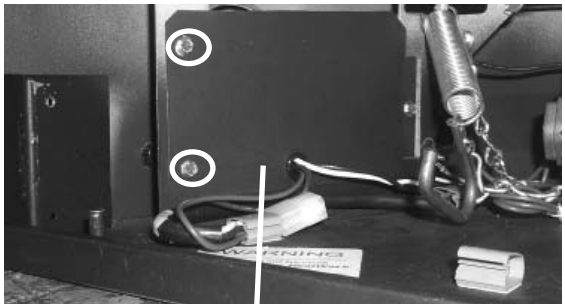

Electric Cover

7) Unplug the black wire from the resister.

8) Carefully slide the fan to the front left side of the unit.

9) Remove the screw which holds the ground wire and disconnect all electrical connectors that are attached to the fan.

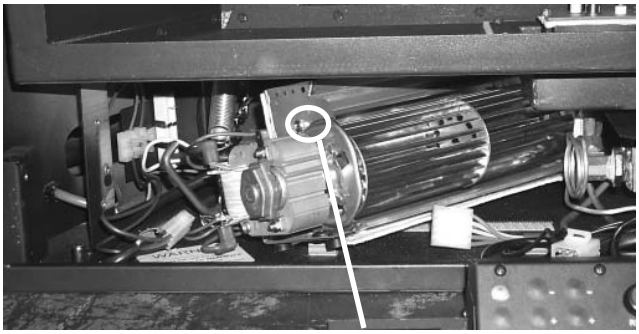

Ground Wire

10) Pull out the fan.

11) Reverse steps to install new fan.

MANUAL CONTROL SWITCH REPLACEMENT

1) Unplug the power source.

2) Open the bottom louver.

3) Remove the 3 screws that secure the manual control louver bracket to the louver.

4) Remove the louver bracket from the manual control box by undoing one screw.

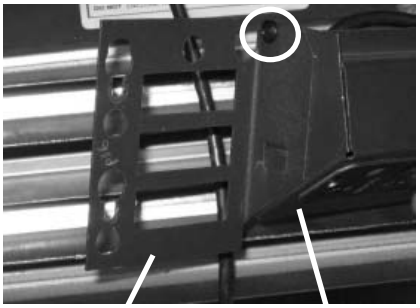

Louver Bracket *Manual Control Box*

5) Remove the valve heat shield by undoing the 2 screws.

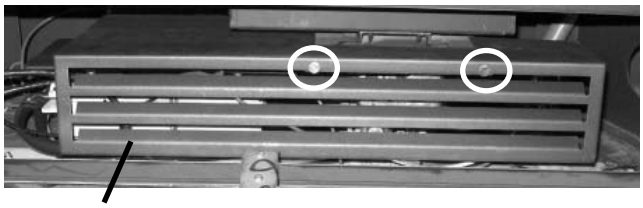

Valve Heat Shield

6) Pull out the ECS box by carefully lifting it up off the velcro.

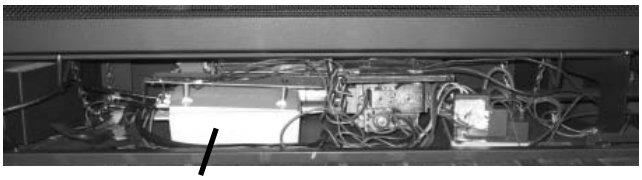

ECS Box

7) Remove the heat shield from the ECS box by undoing the 2 screws.

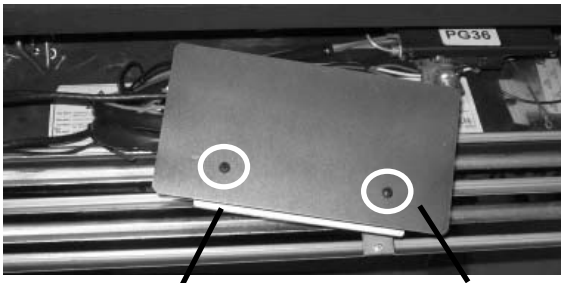

ECS Box *Heat Shield*

8) Remove the ECS box cover by undoing the 3 screws.

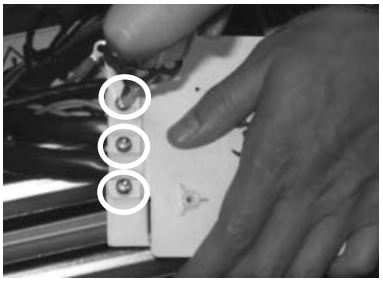

9) Unplug in the CAT5 cable of the manual control box from the connector in the ECS box.

10) Plug the replacement manual control switch CAT5 cable into the connector in the ECS box.

11) Re-install the cover on the ECS box. Ensure to fit the rest of the cable into the groove in the ECS box.

12) Re-install the heat shield on the ECS box.

13) Put the ECS box back in place under the firebox.

14) Reverse steps 5 to 1.

ELECTRONIC COMPONENTS PARTS LIST

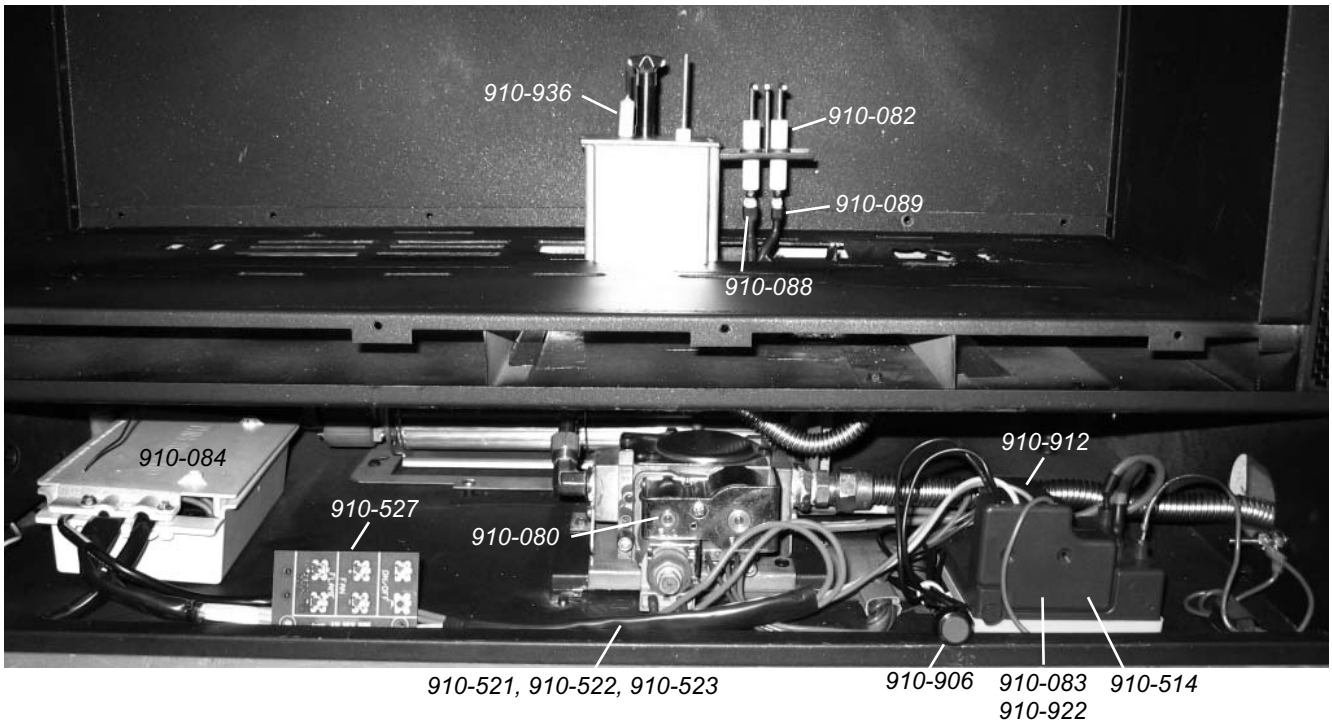

	FG37	FG38	FG39	PG33	PG36 PG36D	HG35	PG121/PG131
910-909 Fan Resistor	√	√	√	√	√	√	√
910-936 Intermittent Pilot	√	N/A	√	√	√	√	√
910-082 Direct Spark Ignitor	N/A	√	N/A	N/A	N/A	N/A	N/A
910-089 Flame Cable	N/A	√	N/A	N/A	N/A	N/A	N/A
910-088 Spark Cable	N/A	√	N/A	N/A	N/A	N/A	N/A
910-084 Control Box	√	√	√	√	√	√	√
910-527 Manual Control	√	√	√	N/A	N/A	√	N/A
910-080 Valve	√	√	√	√	√	√	√
910-521 Control Box Cable **(1)** **910-522** Control Box Cable **(2)** **910-523** Control Box Cable **(3)**	**(2)**	N/A*	**(2)**	**(2)**	**(1)**	**(2)**	**(3)**
910-912 Ignition Module to Valve Cable	N/A	N/A	N/A	√	√	√	√
910-906 Reset Switch	√	N/A	√	√	√	√	√
910-083 Ignition Module **(1)** **910-922** Ignition Module **(2)**	**(2)**	**(1)**	**(2)**	**(2)**	**(2)**	**(2)**	**(2)**
910-514 Jumper	√	N/A	√	√	√	√	√
910-935 Manual Control Switch	N/A	N/A	N/A	√	√	N/A	√

***Note:** The Control Box Cable wires for the FG38 come separately: 910-502, 910-505, 910-506, 910-507, 910-509

MAIN ASSEMBLY

	Part #	Description
3)	948-045	Chain
4)	948-025	Spring
	910-169/P	Fan Motor
	910-904	Wire Harness (Fan End)
	910-714	Power Cord (240 V)
14)	510-026	Hinge Bracket - Left/Right
15)	948-253	Door Handle
17)	*	Wire Holder Clip
20)	510-033	Top Nailing Strip
21)	510-064	Side Nailing Strip
22)	510-153	Baffle Plate
23)	510-011F	Standoff - Top
24)	511-044	Standoff - Side/Back
27)	*	Outer Flue Collar
28)	*	Inner Flue Collar Assembly
30)	*	Gasket for Flue Collar
31)	*	Flue Mounting Plate
	513-901	Brick Panel Set - Standard Brown
	513-902	Brick Panel Set - Standard Red
	513-903	Brick Panel Set - Herringbone Brown
	513-904	Brick Panel Set - Herringbone Red
33)	*	Brick Panel - Back
34)	*	Brick Panel - Left
35)	*	Brick Panel - Right
	511-031	Brick Clip (each)
	918-651	Manual
	513-968	Conversion Kit - NG to LPG

*Not available as a replacement part.

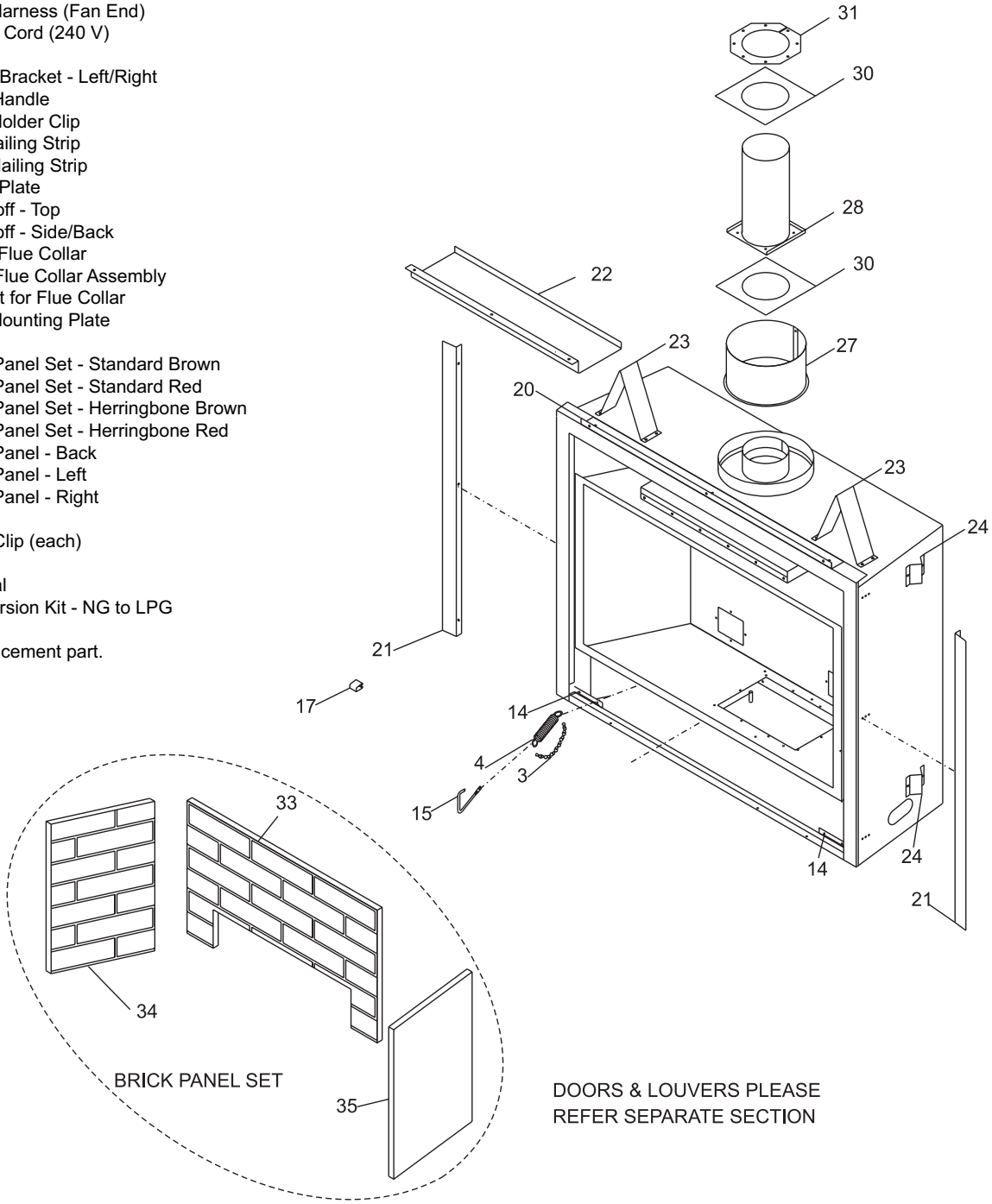

BURNER ASSEMBLY & LOG SET

Part #	Description
516-574/P	Valve Assy - NG
516-576/P	Valve Assy - LPG
52) *	Valve Tray -NG
53) 430-055	Gasket - Valve Access Plate
59) *	Firebox Base
65) *	Pilot Bracket
66) 910-936	Pilot Assembly
904-240	Orifice #37 - NG (Burner)
904-390	Orifice #52 - LPG (Burner)
910-037	Pilot Orifice - LPG
936-170	Orifice Gasket
67) *	Pilot Holder
68) W840470	Pilot Assembly Gasket
79) 512-525	Burner Assy - NG
82) 511-030	Burner Grate Assy
84) *	Rear Log Support Assy
85) 512-930	Log Set
92) *	Rear Log
93) *	Middle Right Log
94) *	Front Left Log
95) *	Center Left Log
96) *	Center Right Log
97) *	Front Bottom Log
98) *	Middle Left Log

*Not available as a replacement part.

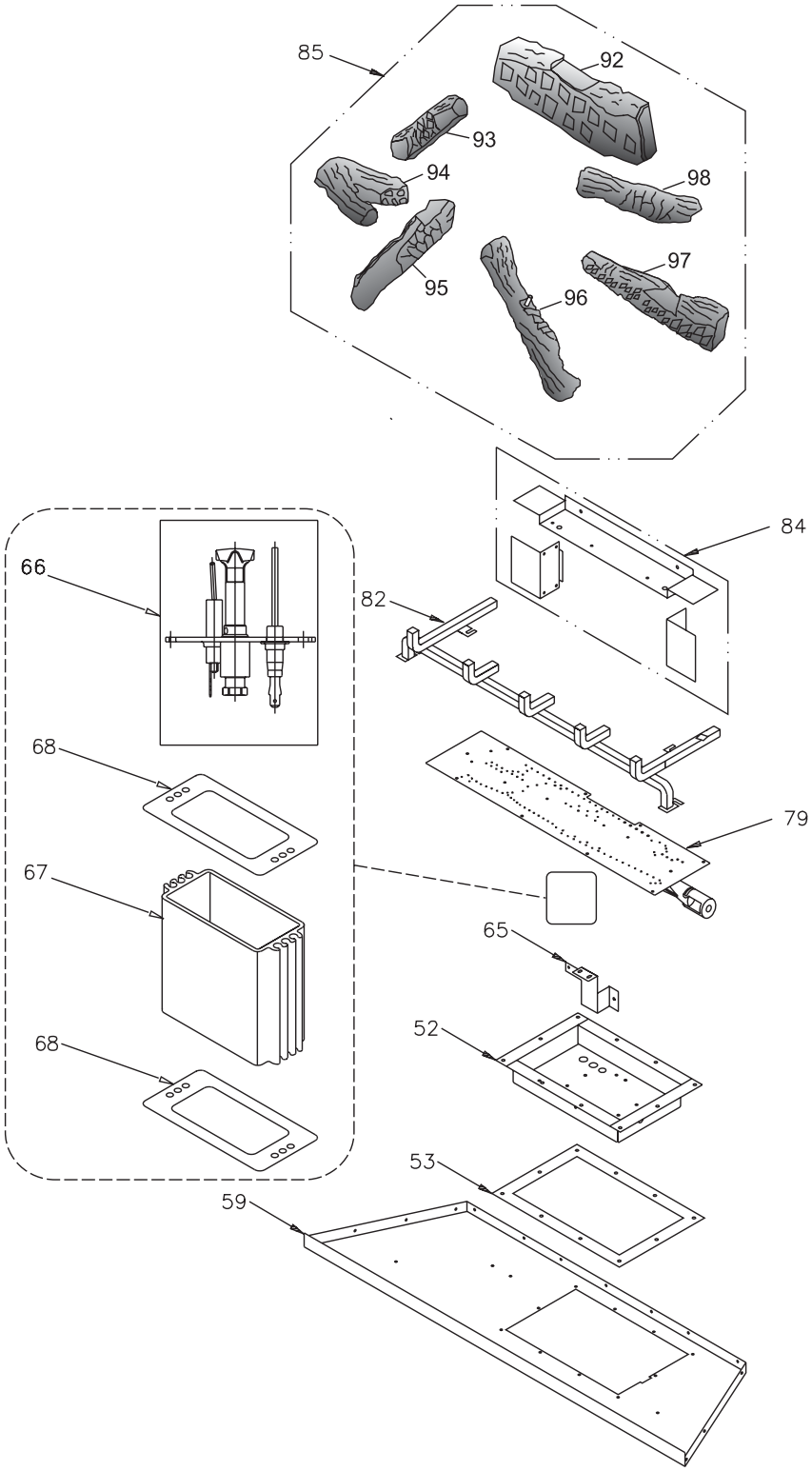

BAY FRONT ASSEMBLY

	Part #	Description
	780-931	Bay Front Complete
103)	940-092/P	Side Glass
107)	936-243	Glass Gasket - Soft Fibre Black
108)	940-094/P	Center Glass
111)	780-075	Brick Panel - Bay
	780-938	Bay Front Trim - Brass
	780-936	Bay Front Trim - Steel
112)	*	Bay Front Trim -Top/Bottom
	780-934	Bay Door Trim - Gold
113)	*	Bay Door Trim-Gold-Bottom
114)	*	Bay Door Trim-Gold-Top

	Part #	Description
	510-988	Bay Louvres - Black
	510-990	Bay Louvres - Gold/Black
	510-992	Bay Louvres - Brass/Black
	510-993	Bay Louvres - Steel/Black
115)	*	Bay Louvre Assy-Top
116)	*	Bay Louvre Assy-Btm
117)	904-196	Magnet (1" round)
120)	*	Flush Glass Retainer Bracket

*Not available as a replacement part.

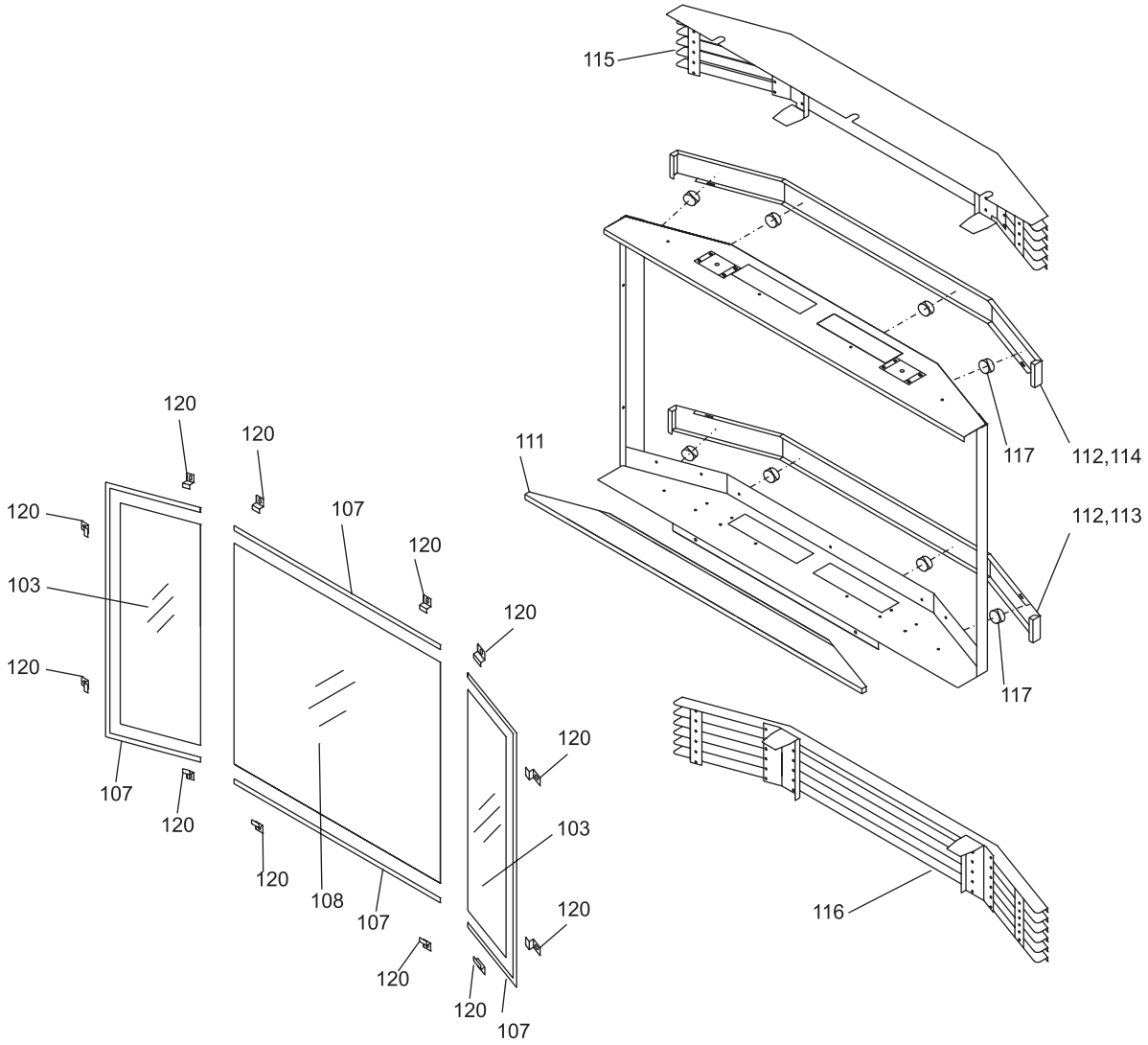

FLUSH FRONT ACCESSORIES

	Part #	Description
132)	512-518	Flush Door Assembly
135)	940-090/P	Glass (Flush)
136)	936-155	Glass Gasket (Tadpole)
	904-691	U-Clip
	510-920	Flush Louvres - Gold/Black
	510-921	Flush Louvres - Brass/Black
	510-922	Flush Louvres - Black
	510-923	Flush Louvres - Steel/Black
138)	*	Flush Louvre Assy-Top
139)	*	Flush Louvre Assy-Btm
	510-954	Barcelona Surround - Black
146)	*	Barcelona Assy
148)	*	Barcelona Louvre Assy
	510-932	Flush Glass Trim - Gold (2/Set)
150)	*	Flush Glass Trim-Gold
	904-196	Magnet (1" round)
	510-934	Flush Glass Trim - Brass (2/Set)
	510-947	Flush Glass Trim - Steel (2/Set)
152)	*	Flush Glass Trim-Brass
	904-196	Magnet (1" round)
	510-986	Finishing Trim (3 piece) - Black
	510-909	Finishing Trim (3 piece) - Steel
	510-910	Finishing Trim (4 piece) - Steel
157)	*	Finishing Trim Left
158)	*	Finishing Trim Top
159)	*	Finishing Trim Right
160)	*	Finishing Trim Bottom
161)	513-949	Flush Door Screen Pkg.

*Not available as a replacement part.

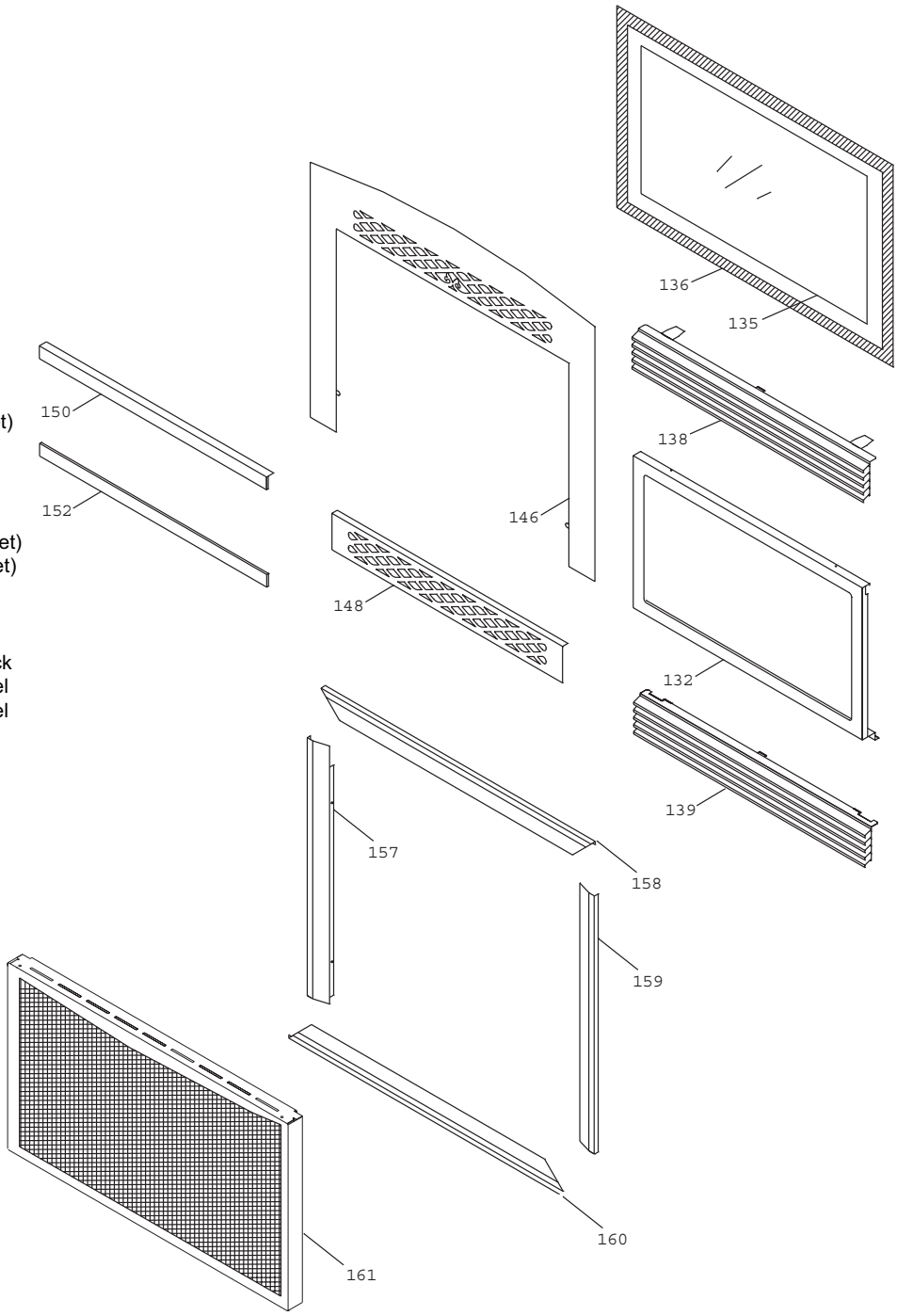

PREMIUM FLUSH FRONT ASSEMBLY

	Part #	Description
	516-916	Premium Flush Front - Black
	516-948	Wiring
180)	*	Top Louver
181)	*	Bottom Louver
182)	*	Thermodisc Mounting Bracket
183)	*	Spacers

*Not available as a replacement part.

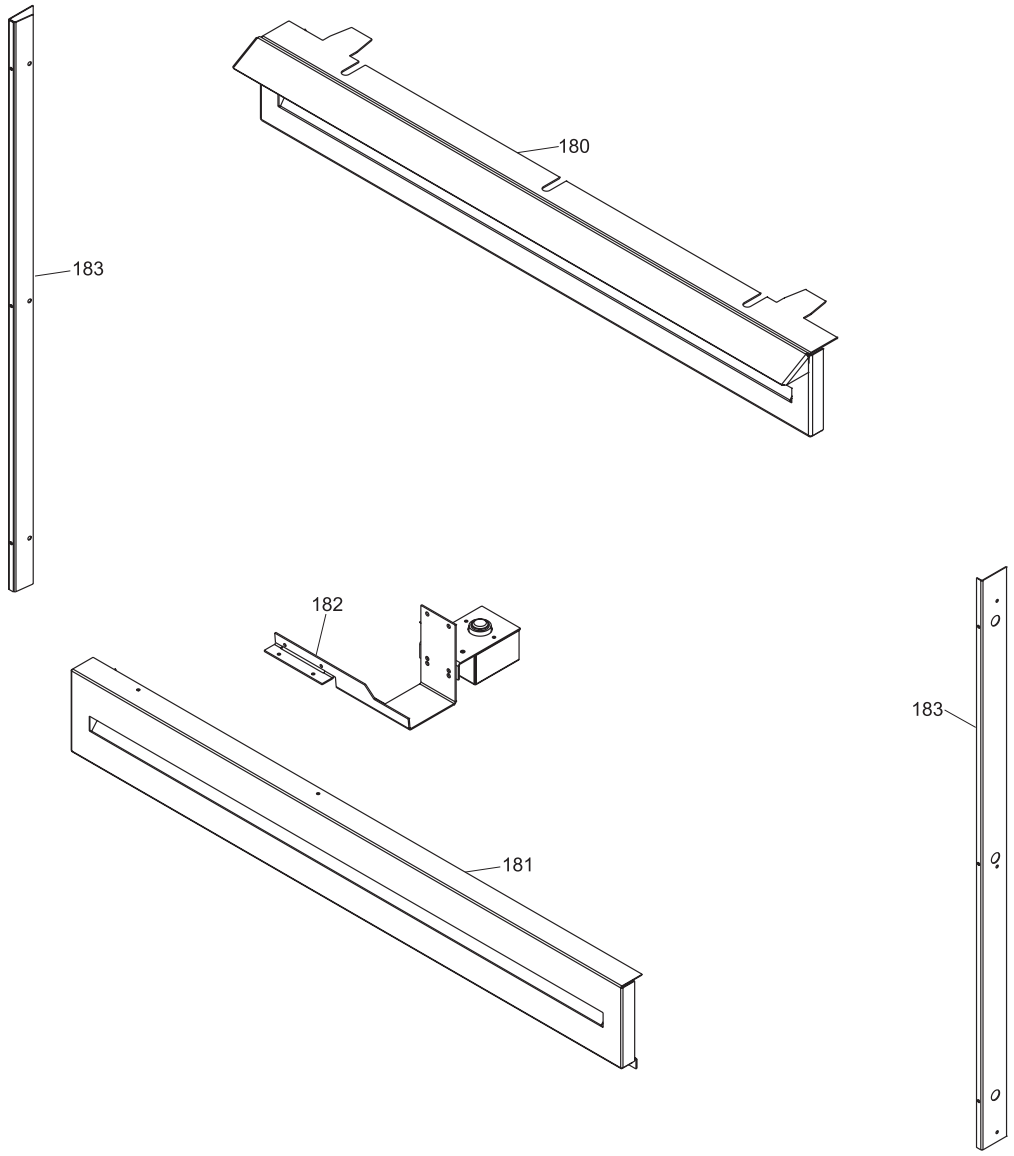

CAST FACEPLATE ASSEMBLY

Part #	Description
513-971	Cast Faceplates (Set) - Black Metallic
201) *	Cast Faceplate - Right
202) *	Cast Faceplate - Top
203) *	Cast Faceplate - Left
513-991	Cast Grills (Set) - Black Metallic (Aust. only: 240 volt)
204) *	Cast Grill - Top
205) *	Cast Grill - Bottom
513-976	Cast Faceplates (Set) - Black Enamel
201) *	Cast Faceplate - Right
202) *	Cast Faceplate - Top
203) *	Cast Faceplate - Left
513-996	Cast Grills (Set) - Black Enamel (Aust. only: 240 volt)
204) *	Cast Grill - Top
205) *	Cast Grill - Bottom

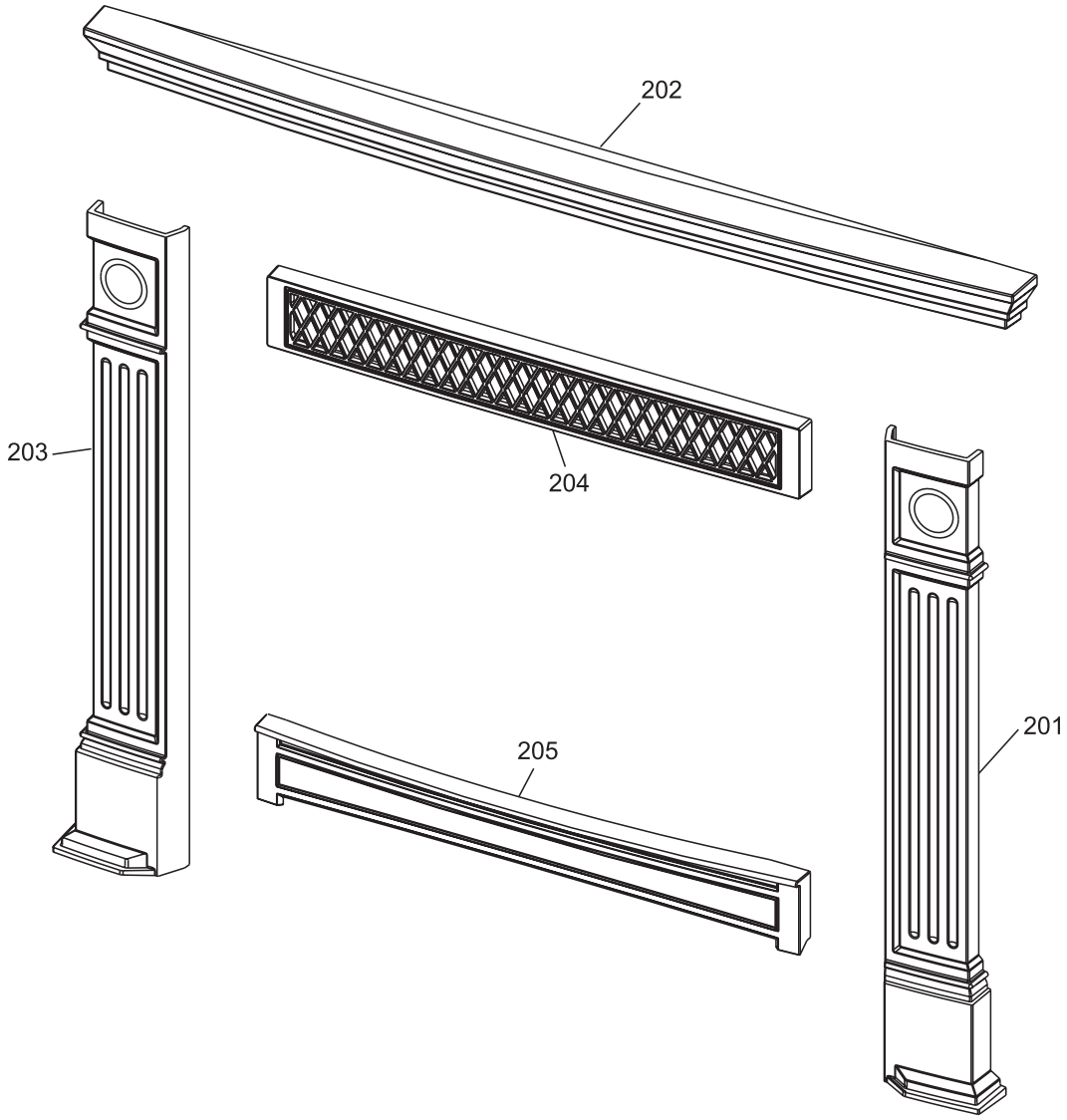

NOTES

NOTES

WARRANTY

Regency® Fireplace Products are designed with reliability and simplicity in mind. In addition, our internal Quality Assurance Team carefully inspects each unit thoroughly before it leaves our door. FPI is pleased to extend this limited lifetime warranty to the original purchaser of a Regency® Product.

The Warranty: Lifetime
Covered under the agreement are the following components: Combustion chamber, heat exchanger, burner tubes, logs, embers, glass (thermal breakage) and all gold plating against defective manufacture.

NOTE: Gold Plated Barcelona Front - slight imperfections in the gold plating are due to the plating process and are not considered defects.

The above will be covered for parts and labour for the first five years and parts only thereafter.

Electrical components such as blowers, switches, wiring, thermodiscs, remote control, thermopiles, thermocouples and gas valves are covered for one year from the date of purchase.

The warranty on brass parts is for one year, no labour. The brass is not warranted against tarnishing.

Conditions:
All installations must be performed by a qualified gas fitter and installed according to all applicable local and national codes. Also, all service work must be carried out by a qualified gas service person provided by the selling dealer. It is the responsibility of the installer to ensure that the appliance is firing as per rating plate. Any part or parts of this unit which in our judgement show evidence of such defect will be repaired or replaced at Regency®'s option, through an accredited distributor or agent provided that the defective part be returned to the distributor or agent **Transportation Prepaid,** if requested. In areas where there is not an approved service agent or the closest approved service agent is situated more than twenty-five (25) kilometres from the installation, Australian Heating Distributors are not obliged to arrange warranty repairs and travel and/or additional labour charges will apply.

Exclusions:
This limited Lifetime Warranty does not extend to or include paint, door or glass gasketing or trim. It does not cover installation and operational related problems such as over-firing, downdrafts or spillage caused by environmental conditions, nearby trees, buildings, hilltops, mountains, inadequate flueing or ventilation, excessive offsets, negative air pressures caused by insufficient make up air, mechanical systems such as furnaces, fans, clothes dryers etc.

The warranty does not extend to any part or parts which show evidence of misuse or abuse, neglect, accident, lack of maintenance, or improper installation.

Products made by other manufacturers and used in conjunction with the operation of this appliance without authorization from Regency®, may nullify your warranty on this product.

FPI Ltd., shall in no event be liable for any special, indirect consequential damages of any nature whatsoever which are in excess of the original purchase price of the product. Any alteration to the unit which causes sooting or carboning that results in damage to the exterior facia is not the responsibility of FPI.

General:
It is essential that all submitted claims provide all of the necessary information including purchase date, serial #, type of unit and part or parts requested.

SUBJECT TO CHANGE.

DISTRIBUTORS:

Western Australia
AUSTRALIAN HEATING DISTRIBUTORS
31 CLUNE STREET
BAYSWATER, WA 6053

Eastern Australia
FIREPLACE PRODUCTS AUSTRALIA PTY. LTD.
21-23 SOUTH LINK BLVD.
DANDENONG, VIC 3175

SERVICE AGENTS:

HEARTH HOUSE SERVICE
31 CLUNE STREET
BAYSWATER, WA 6053

NOTE: PLEASE RETAIN YOUR INVOICE AS PROOF OF PURCHASE FOR WARRANTY VERIFICATION

INCORRECT INSTALLATION OR GAS PRESSURE SETTINGS ARE NOT COVERED BY WARRANTY

A SERVICE OR CALLOUT FEE WILL BE CHARGED IN THESE CIRCUMSTANCES.

© Copyright 2007, FPI Fireplace Products International Ltd. All rights reserved.

Printed in Canada